1976 KE100

PARTS DIAGRAM

TURN SIGNALS (KE100-A10)

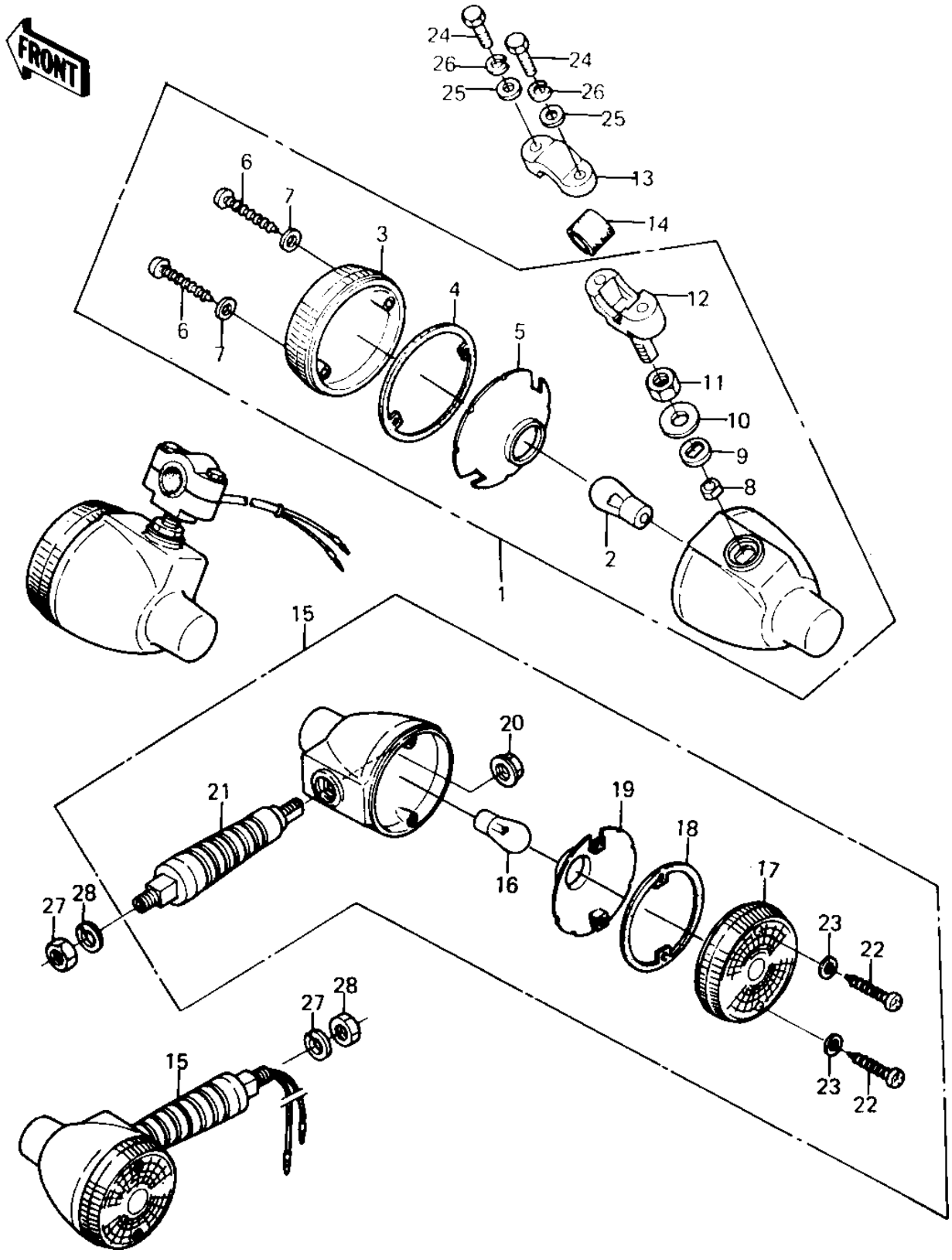

© 2026 Kawasaki Motors Corp., U.S.A.

1976 KE100

PARTS LIST

TURN SIGNALS (KE100-A10)

ITEM NAME	PART NUMBER	QUANTITY
LAMP ASSY,FR SIGNAL (Ref # 1)	23037-1039	2
BULB,6V 21CP (Ref # 2)	92069-056	2
LENS-SIGNAL LAMP (Ref # 3)	23048-1076	2
GASKET,SGNL LAMP LENS (Ref # 4)	11009-1128	2
REFLECTOR,SIGNAL LAMP (Ref # 5)	23035-1003	2
SCREW,TAPPING (Ref # 6)	92009-1056	4
WASHER-PLAIN,4MM (Ref # 7)	23058-002	4
COLLAR,FR SIGNAL LAMP (Ref # 8)	92027-1182	2
GASKET,S LAMP BRACKET (Ref # 9)	11009-1133	2
WASHER,PLAIN,10.5X24 (Ref # 10)	92022-1137	2
NUT,SGNL LAMP BRACKET (Ref # 11)	92015-1073	2
BRACKET,F SIGNAL LAMP (Ref # 12)	23051-1028	2
BRACKET,F SIGNAL LAMP (Ref # 13)	23051-1018	2
DAMPER RUBBER (Ref # 14)	23066-003	2
LAMP ASSY,SIGNAL (Ref # 15)	23037-1087	2
BULB,6V 21CP (Ref # 16)	92069-056	2
LENS-SIGNAL LAMP (Ref # 17)	23048-1076	2
GASKET,SGNL LAMP LENS (Ref # 18)	11009-1128	2
REFLECTOR,SIGNAL LAMP (Ref # 19)	23035-1003	2
NUT,SIGNAL LAMP (Ref # 20)	92015-1072	2
BRACKET,SIGNAL LAMP (Ref # 21)	23051-1033	2
SCREW,TAPPING (Ref # 22)	92009-1056	4
WASHER-PLAIN,4MM (Ref # 23)	23058-002	4
BOLT,HEX HEAD,5X30 (Ref # 24)	110B0530A	4
WASHER PLAIN 5MM (Ref # 25)	411B0500	4
WASHER SPRING 5MM (Ref # 26)	461F0500	4
NUT 10MM (Ref # 27)	315B1000	2
WASHER SPRING 10MM (Ref # 28)	461F1000	2

© 2026 Kawasaki Motors Corp., U.S.A.