1976 KE100

PARTS DIAGRAM

SIDE COVER/OIL TANK

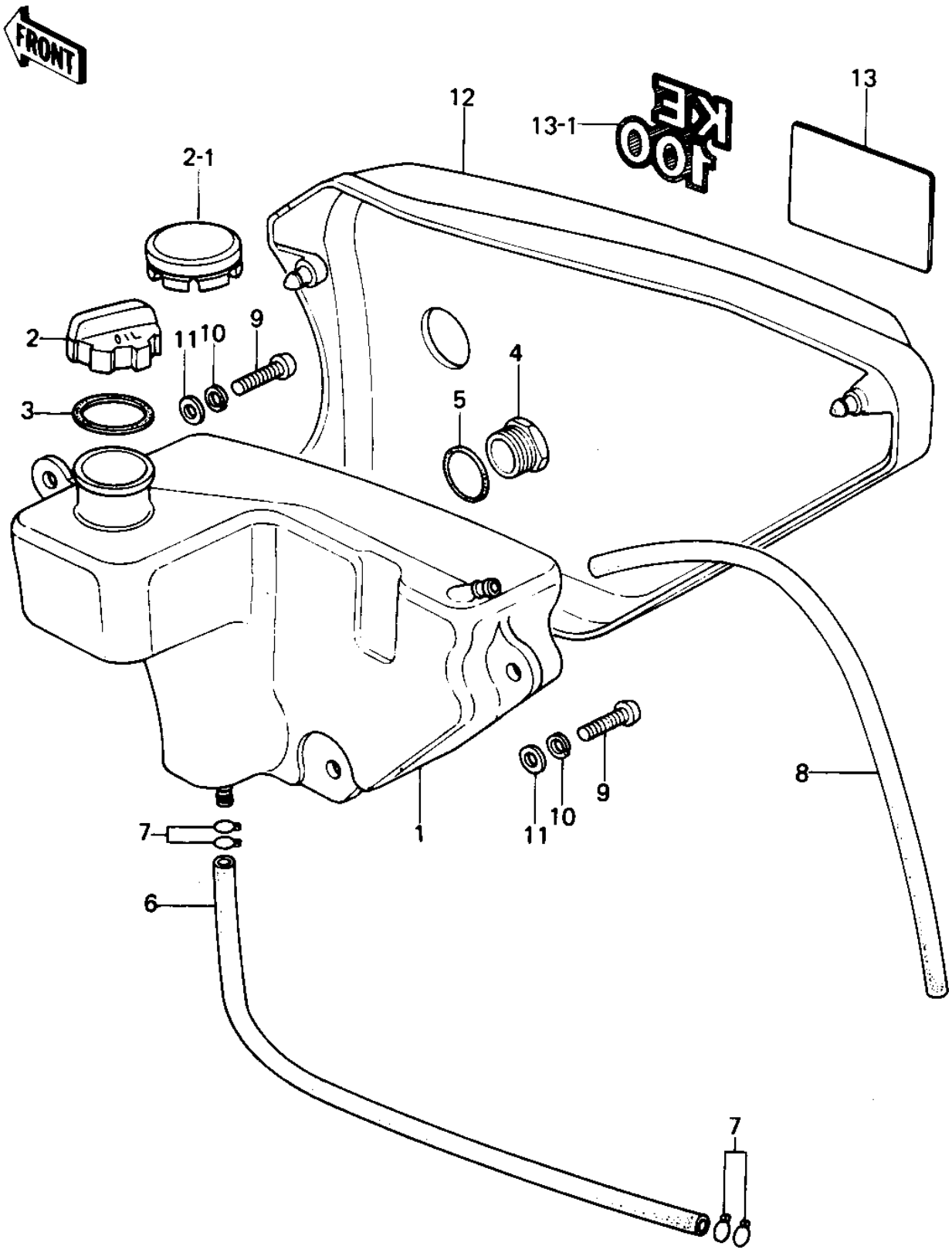

© 2026 Kawasaki Motors Corp., U.S.A.

1976 KE100

PARTS LIST

SIDE COVER/OIL TANK

ITEM NAME	PART NUMBER	QUANTITY
TANK-OIL (Ref # 1)	52001-029	1
TANK,OIL (Ref # 1)	52001-1003	1
CAP-OIL TANK (Ref # 2)	52003-019	1
CAP-OIL TANK (Ref # 2-1)	51049-1004	1
GASKET-OIL TANK CAP (Ref # 3)	92065-085	1
GUAGE-OIL LEVEL (Ref # 4)	52015-002	1
"O" RING,20MM (Ref # 5)	92055-051	1
PIPE-FUEL (Ref # 6)	92059-073	1
CLAMP FUEL PIPE (Ref # 7)	92037-010	4
TUBE-VINYL,5X280 (Ref # 8)	700Q05280	1
SCREW PAN HEAD 6X16 (Ref # 9)	220B0616	3
WASHER SPRING 6MM (Ref # 10)	461F0600	3
WASHER 6.5X20X1.6T (Ref # 11)	92022-125	3
COVER,RH SIDE,C.BLUE (Ref # 12)	36007-049-4C	1
COVER,RH SIDE,C.COPPR (Ref # 12)	36007-049-4D	1
COVER,RH SIDE,P.RED (Ref # 12)	36007-049-4P	1
COVER,RH SIDE,P.GREEN (Ref # 12)	36007-049-4Q	1
COVER,RH SIDE,C.C.BLU (Ref # 12)	36007-049-4S	1
COVER,RH SIDE,S.F.YEL (Ref # 12)	36007-049-7H	1
COVER,L.H SIDE,S.GREN (Ref # 12)	36001-1065-6P	1
COVER,L.H SIDE,S.YELL (Ref # 12)	36001-1065-6R	1
COVER,LH SIDE B GREEN (Canada) (Ref # 12)	36001-1065-6J	1
COVER,R.H.SIDE,F.RED (Ref # 12)	36001-1065-6L	1
COVER,R.H.SIDE,B.BLUE (Ref # 12)	36001-1065-6K	1
EMBLEM,SIDE COVER (Ref # 13)	56018-222	1
EMBLEM,SIDE COVER (Ref # 13-1)	56018-1038	1

© 2026 Kawasaki Motors Corp., U.S.A.