1976 KE100

PARTS DIAGRAM

REAR FENDER



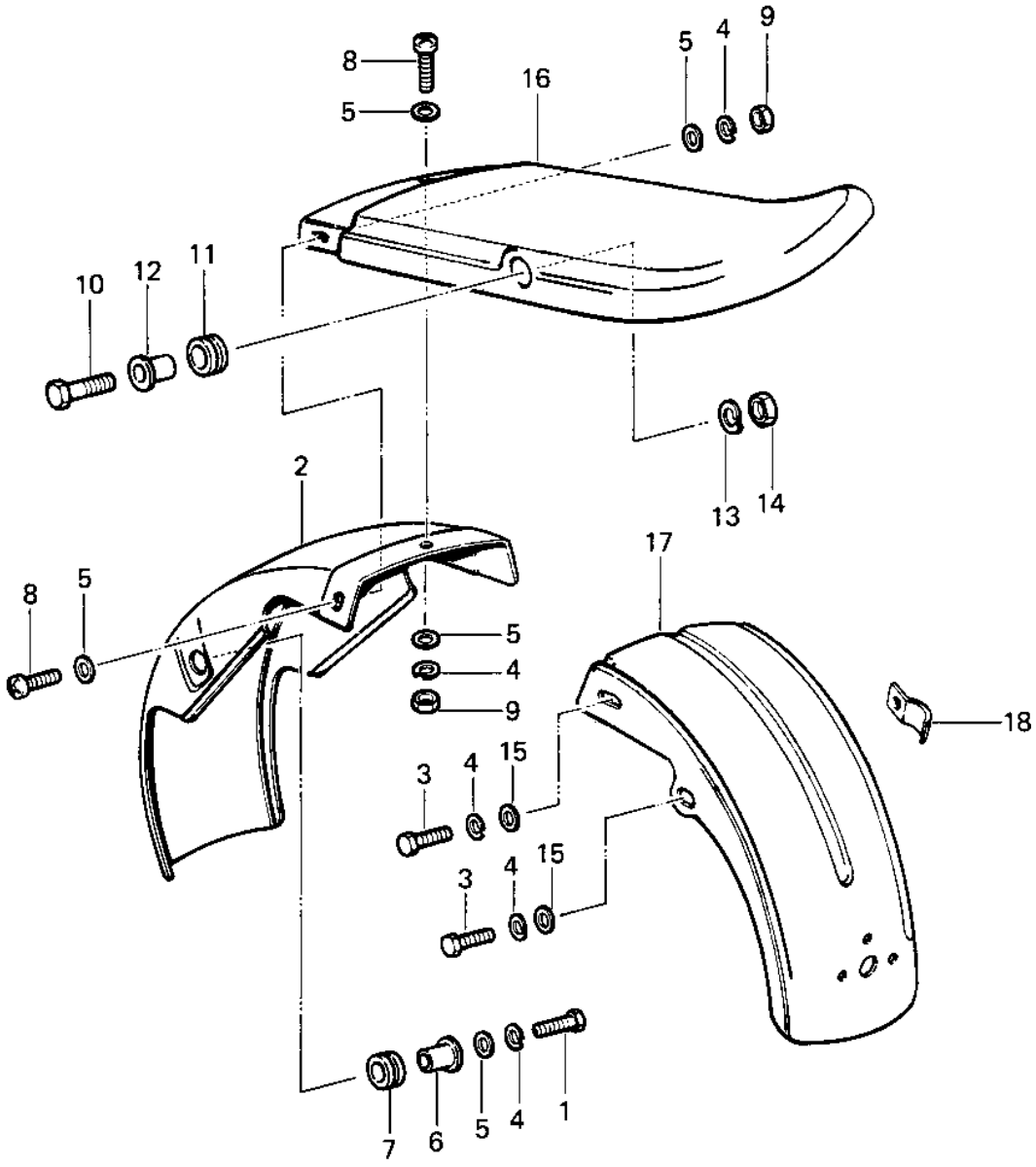

© 2026 Kawasaki Motors Corp., U.S.A.

1976 KE100

PARTS LIST

REAR FENDER

ITEM NAME	PART NUMBER	QUANTITY
BOLT-UPSET,6X16 (Ref # 1)	112G0616	2
FENDER-RR (Ref # 2)	35022-064	1
BOLT-UPSET 6X14 (Ref # 3)	112B0614	4
WASHER SPRING 6MM (Ref # 4)	461F0600	10
WASHER 6.5X20X1.6T (Ref # 5)	92022-125	7
COLLAR (Ref # 6)	92027-103	2
DAMPER RUBBER (Ref # 7)	92075-105	2
SCREW PAN HEAD 6X14 (Ref # 8)	220B0614	3
NUT 6MM (Ref # 9)	312B0600	3
BOLT-HEX HEAD,10X46 (Ref # 10)	92007-029	2
DAMPER RUBBER (Ref # 11)	92075-104	2
COLLAR (Ref # 12)	92027-147	2
WASHER SPRING 10MM (Ref # 13)	461F1000	2
NUT,10MM (Ref # 14)	314B1000	2
WASHER PLAIN 6MM (Ref # 15)	411B0600	4
COVER,RR.FEND,C.BLUE (Ref # 16)	53043-009-4C	1
COVER,RR FEND,C.COPPR (Ref # 16)	53043-009-4D	1
COVER,RR FENDER,GRAY (Ref # 16)	53043-009-6Y	1
COVER,RR FENDER WHITE (Ref # 16)	53043-009-6V	1
COVER,RR FEN,S.GREEN (Ref # 16)	53043-009-6P	1
COVER,RR FEN,S.YELLOW (Ref # 16)	53043-009-6R	1
COVER,REAR FENDER GRN (Canada) (Ref # 16)	53043-009-6J	1
COVER,REAR FENDER,RED (Ref # 16)	53043-009-6L	1
COVER,REAR FENDER,BLU (Ref # 16)	53043-009-6K	1
FENDER-RR (Ref # 17)	35022-065	1
CLAMP CABLE (Ref # 18)	92037-020	1

© 2026 Kawasaki Motors Corp., U.S.A.