1980 KE100

PARTS DIAGRAM

REAR HUB/BRAKE/CHAIN

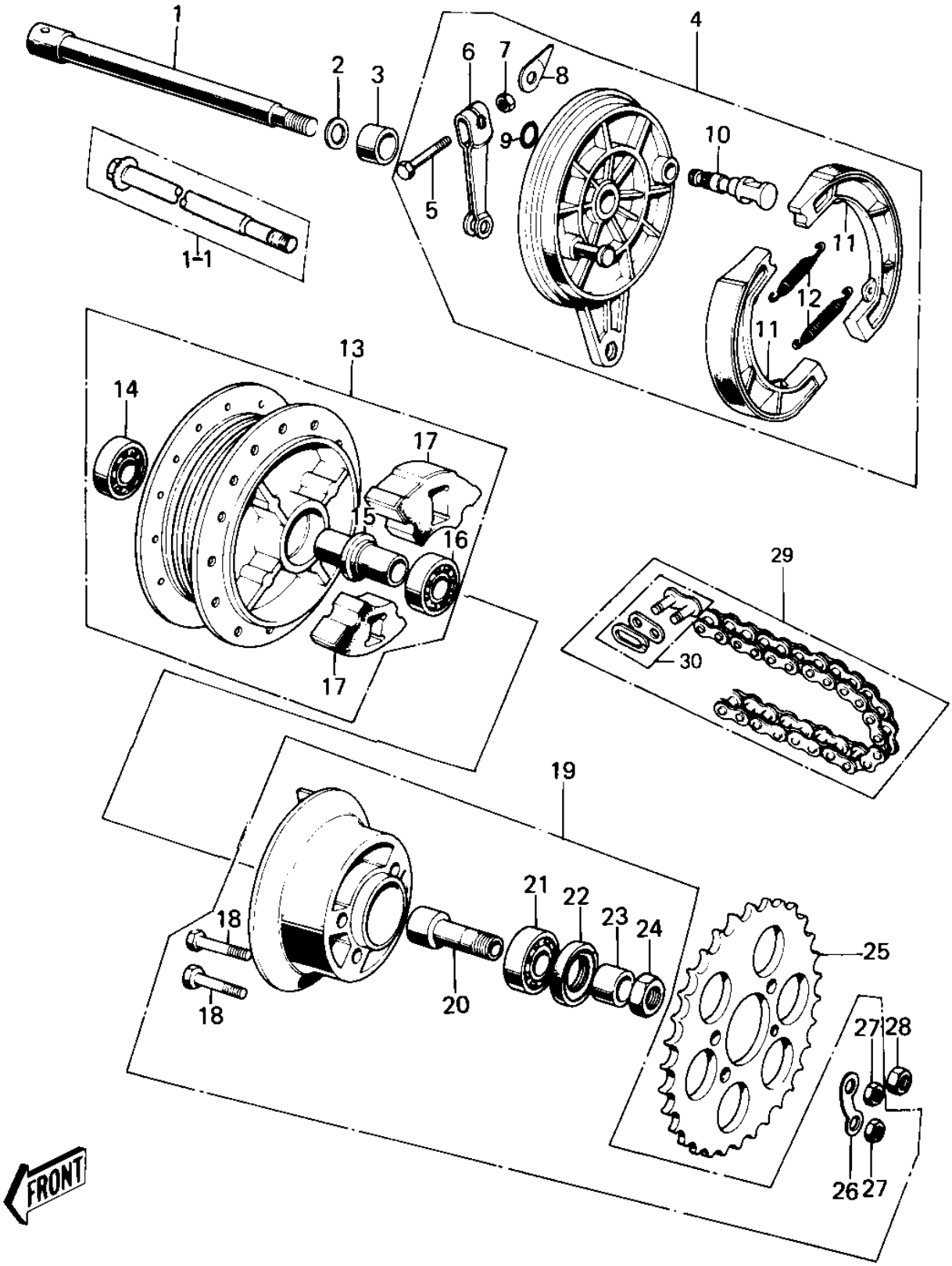

© 2026 Kawasaki Motors Corp., U.S.A.

1980 KE100

PARTS LIST

REAR HUB/BRAKE/CHAIN

ITEM NAME	PART NUMBER	QUANTITY
AXLE,12X215 (Ref # 1)	41068-1109	
AXLE,12X215 (Ref # 1-1)	41068-1109	
WASHER PLAIN 12MM (Ref # 2)	411B1200	
WASHER PLAIN 12MM (Ref # 2)	411B1200	
COLLAR REAR HUB R.H (Ref # 3)	42032-006	
PANEL-ASY,RR BRK,BUFF (Ref # 4)	42006-066-80	
BOLT-UPSET (Ref # 5)	112G0630	
LEVER-REAR BRAKE CAM (Ref # 6)	42029-020	
NUT,6MM (Ref # 7)	41072-007	
INDICATOR,BKSHOE (Ref # 8)	41085-003	
CAM SHAFT,REAR BRAKE (Ref # 10)	42026-018	
SHOE-BRAKE (Ref # 11)	41048-1085	
SPRING,BRAKE SHOE (Ref # 12)	92081-1766	
DRUM ASSY,RR BRK,BUFF (Ref # 13)	42005-031-80	
BEARING BALL #6301Z (Ref # 14)	601B6301Z	
SPACER-RR HUB BEARING (Ref # 15)	42010-005	
BEARING BALL #6201 (Ref # 16)	601B6201	
DAMPER REAR HUB SHOCK (Ref # 17)	42014-016	
BOLT REAR SPROCKET (Ref # 18)	92001-082	
COUPLING ASSY-RR HUB (Ref # 19)	42033-014	
SLEEVE-RR HUB COUPLNG (Ref # 20)	42036-013	
BEARING BALL #6203 (Ref # 21)	601B6203	
OIL SEAL-COUPLING (Ref # 22)	92052-003	
BUSH,COUPLNG OIL SEAL (Ref # 23)	42037-003	
NUT,16MM (Ref # 24)	42045-004	
REAR SPROCKET 42T (Ref # 25)	42041-076	
RR SPROCKET 39T (OPT) (Ref # 25)	42041-104	
SPROCKET-HUB,40T (Ref # 25)	42041-1095	
WASHER LOCK (Ref # 26)	92088-011	

© 2026 Kawasaki Motors Corp., U.S.A.

1980 KE100

PARTS LIST

REAR HUB/BRAKE/CHAIN

ITEM NAME	PART NUMBER	QUANTITY
NUT 10MM (Ref # 27)	315B1000	
NUT 10MM (Ref # 28)	42045-005	
CHAIN,DRIVE,EK428-G (Ref # 29)	92057-1085	
JOINT-CHAIN (Ref # 30)	92058-1014	

© 2026 Kawasaki Motors Corp., U.S.A.