1979 KE100

PARTS DIAGRAM

FRONT FORK (KE100-A9/A10)

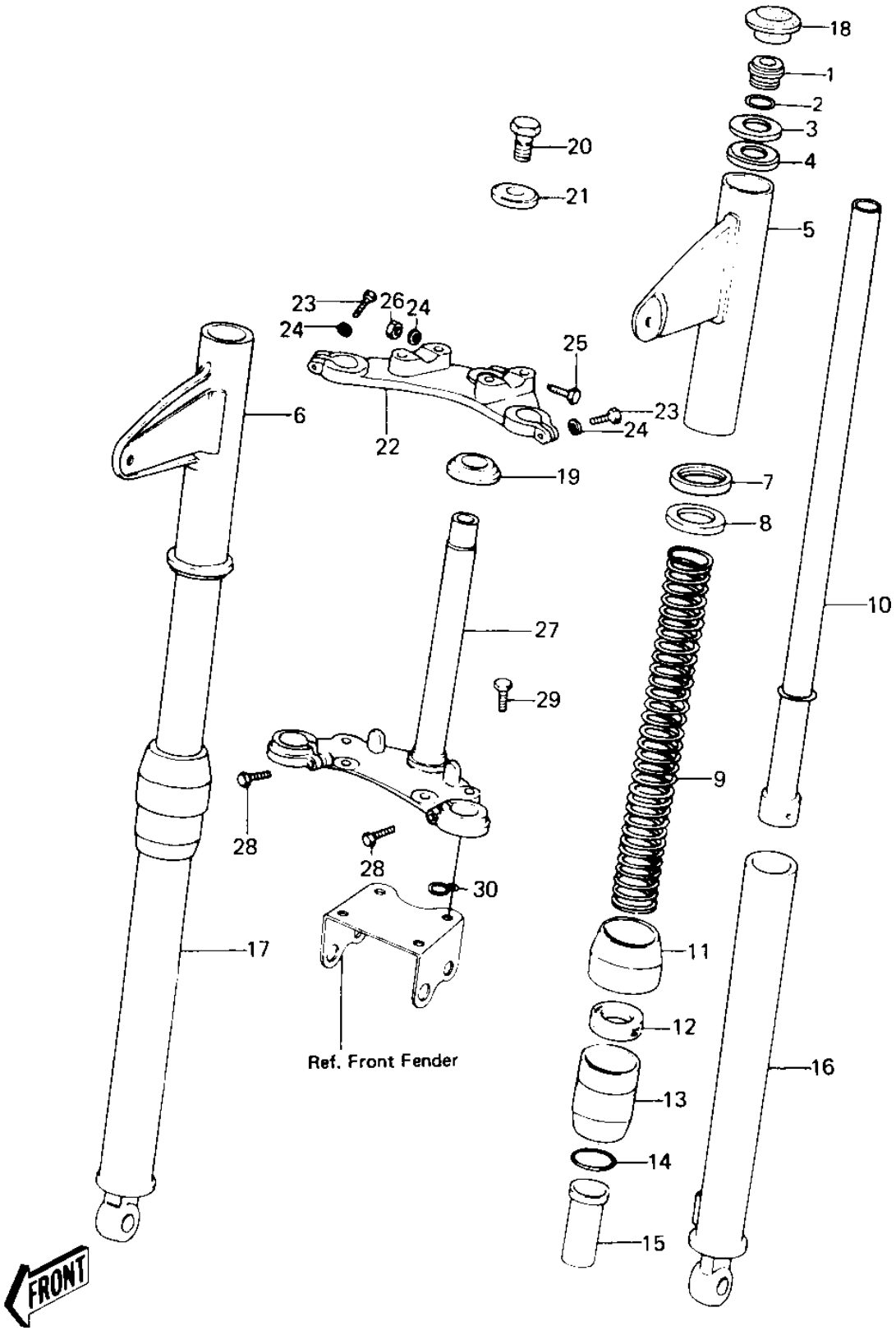

© 2026 Kawasaki Motors Corp., U.S.A.

1979 KE100

PARTS LIST

FRONT FORK (KE100-A9/A10)

ITEM NAME	PART NUMBER	QUANTITY
FORK-FRONT (Ref # 1~28)	44001-1159	
GUIDE,SPRING (Ref # 1)	11012-1126	
"O" RING (Ref # 2)	92055-1087	
GASKET-FORK COVER (Ref # 3)	44045-037	
WASHER-FORK COVER (Ref # 4)	44043-046	
COVER,L.H FORK,F.BLK (Ref # 5)	44033-078-21	
COVER,R.H FORK,F.BLK (Ref # 6)	44034-078-21	
CAP,FORK COVER,LOWER (Ref # 7)	92022-1197	
GASKET FORK COVER (Ref # 8)	44045-012	
SPRING,FORK (Ref # 9)	44026-1057	
TUBE,FORK INNER (Ref # 10)	39093-1026	
DUST SHIELD FORK (Ref # 11)	44010-006	
OIL SEAL (Ref # 12)	92049-1049	
NUT FORK OUTER TUBE (Ref # 13)	44007-007	
'O' RING OUTER TUBE (Ref # 14)	44046-012	
GUIDE-FORK INNER TUBE (Ref # 15)	44015-013	
TUBE,L.H.FORK OUTER (Ref # 16)	39093-1025	
TUBE,R.H.FORK OUTER (Ref # 17)	39093-1024	
CAP,FORK (Ref # 18)	11012-1127	
CONE LOWER BEARING (Ref # 19)	92047-004	
BOLT STRNG STEM HEAD (Ref # 20)	44041-007	
WASHER STRNG STEM HD (Ref # 21)	44043-016	
HEAD-STEERING STEM (Ref # 22)	44039-047	
BOLT (Ref # 23)	114G0836	
WASHER SPRING 8MM (Ref # 24)	461F0800	
BOLT HEX HEAD 8X50 (Ref # 25)	114G0850	
NUT,8M/M (Ref # 26)	317B0800	
STEM-STEERING (Ref # 27)	44037-052	
BOLT PINCH (Ref # 28)	44041-010	

© 2026 Kawasaki Motors Corp., U.S.A.

1979 KE100

PARTS LIST

FRONT FORK (KE100-A9/A10)

ITEM NAME	PART NUMBER	QUANTITY
BOLT,6X10 (Ref # 29)	112G0610	
CLAMP-CABLE (Ref # 30)	92037-046	

© 2026 Kawasaki Motors Corp., U.S.A.