1976 KE100

PARTS DIAGRAM

AIR CLEANER

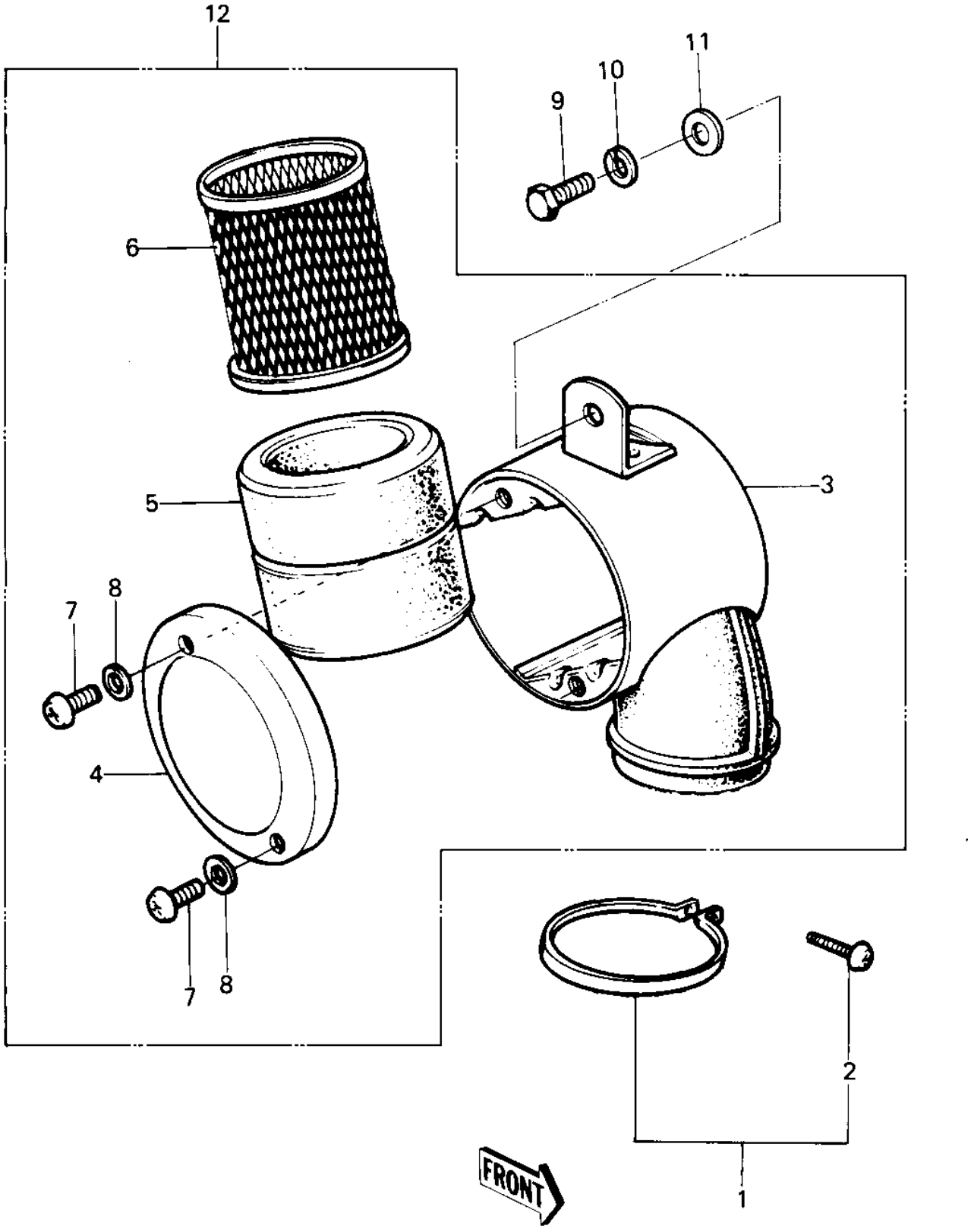

© 2026 Kawasaki Motors Corp., U.S.A.

1976 KE100

PARTS LIST

AIR CLEANER

ITEM NAME	PART NUMBER	QUANTITY
CLAMP-AIR CLEANER (Ref # 1)	92037-068	1
SCREW PAN HEAD 6X35 (Ref # 2)	220B0635	1
BODY-AIR CLEANER (Ref # 3)	11011-014	1
CAP,AIR CLEANER (Ref # 4)	11012-050	1
CAP,AIR CLEANER (Ref # 4)	11012-050	1
ELEMENT,AIR,CLNR (Ref # 5)	11013-029	1
ELEMENT,AIR CLNR (Ref # 5)	11013-1008	1
HOLDER-CLNR. ELEMENT (Ref # 6)	11014-004	1
SCREW PAN HEAD 6X8 (Ref # 7)	220B0608	2
WASHER PLAIN 6MM (Ref # 8)	410B0600	2
BOLT-UPSET,6X16 (Ref # 9)	112G0616	1
WASHER SPRING 6MM (Ref # 10)	461F0600	1
WASHER PLAIN 6MM (Ref # 11)	410B0600	1
AIR CLEANER ASY,BLACK (Ref # 12)	11010-082-21	1
AIR CLEANER ASY,BLACK (Ref # 12)	11010-082-21	1
AIR CLEANER ASSY (Ref # 12)	11010-1015	1

© 2026 Kawasaki Motors Corp., U.S.A.