1980 KE100

PARTS DIAGRAM

KICKSTARTER MECHANISM

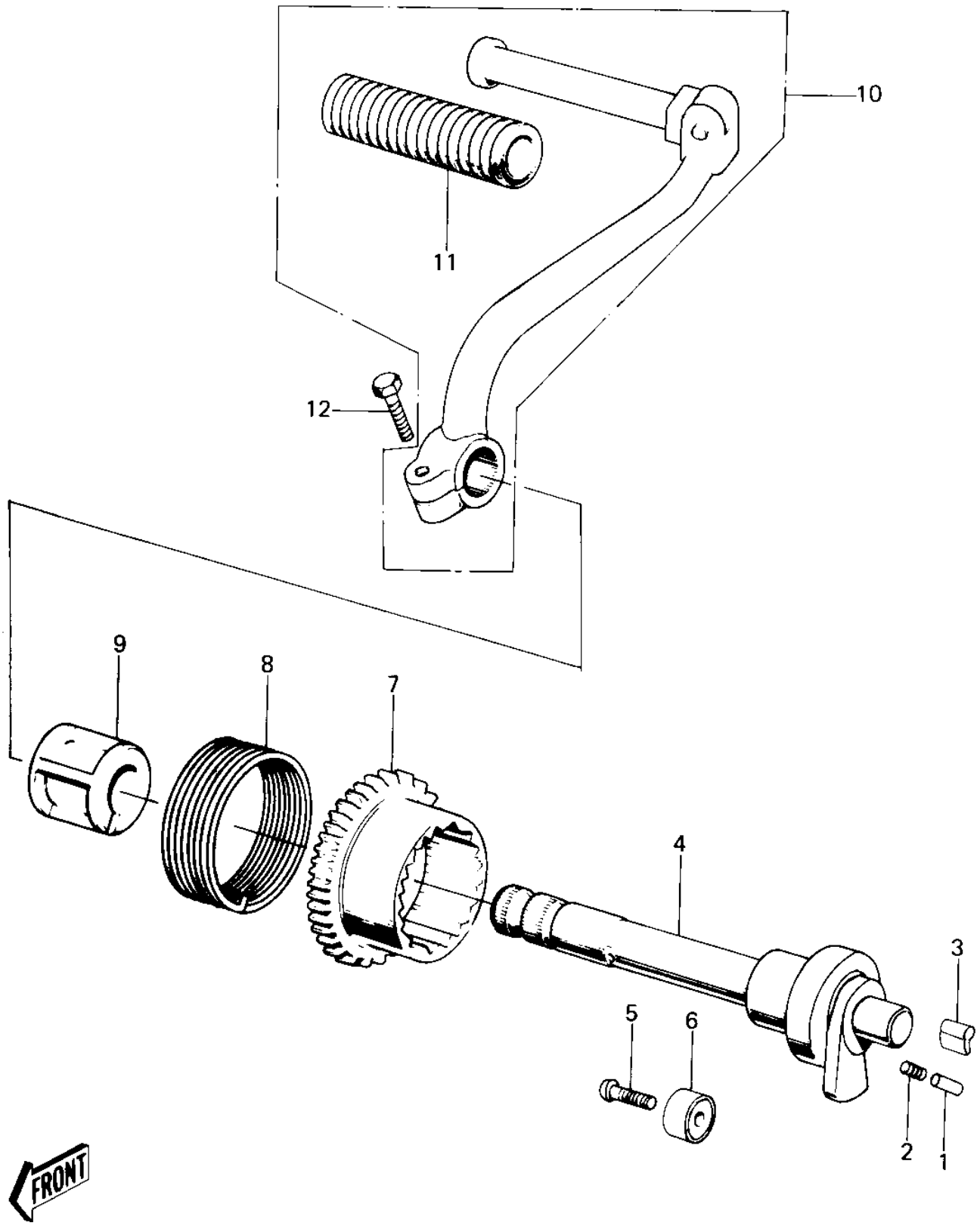

© 2026 Kawasaki Motors Corp., U.S.A.

1980 KE100

PARTS LIST

KICKSTARTER MECHANISM

ITEM NAME	PART NUMBER	QUANTITY
P/N,KICKSTARTER PAWL (Ref # 1)	92043-013	
SPRING, KICKSTARTER (Ref # 2)	92081-014	
PAWL KICKSTARTER (Ref # 3)	13069-005	
SHAFT-KICK (Ref # 4)	13066-1022	
SHAFT-KICK (Ref # 4)	13066-1022	
SHAFT-KICK (Ref # 4)	13066-1022	
SCREW CNTSNK HD 6X20 (Ref # 5)	221B0620	
STOPPER KICKSTARTER (Ref # 6)	13072-003	
GEAR KICKSTARTER (Ref # 7)	13068-007	
SPRING KICKSTARTER (Ref # 8)	92083-004	
GUIDE KICK SPRING (Ref # 9)	13070-003	
PEDAL, KICKSTARTER (Ref # 10)	13064-007	
RUBBER KICK PEDAL (Ref # 11)	13063-002	
BOLT-SMALL-UPSET 8X25 (Ref # 12)	115G0825	

© 2026 Kawasaki Motors Corp., U.S.A.