1976 KE100

PARTS DIAGRAM

GEAR CHANGE MECHANISM (KE100-A9/A10)

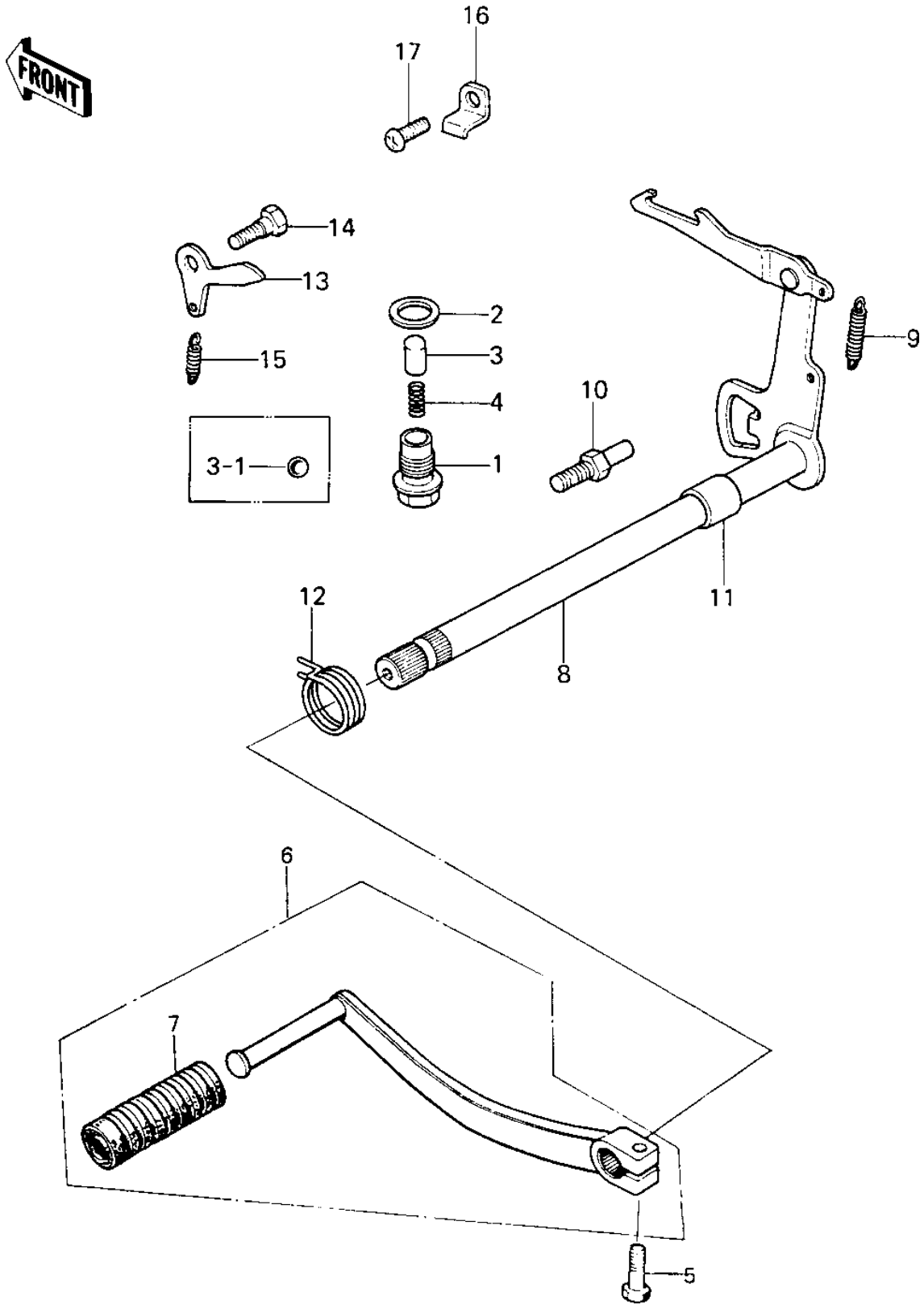

© 2026 Kawasaki Motors Corp., U.S.A.

1976 KE100

PARTS LIST

GEAR CHANGE MECHANISM (KE100-A9/A10)

ITEM NAME	PART NUMBER	QUANTITY
BOLT,NEUTRAL POSITION (Ref # 1)	92001-182	1
WASHER,PLAIN (Ref # 2)	92022-324	1
PIN,NEUTRAL POSITIONG (Ref # 3)	92043-131	1
BALL,STEEL,13/32" (Ref # 3-1)	600A1300	1
SPRING, NEUTRAL,POSITIONING (Ref # 4)	92081-112	1
BOLT-UPSET,6X20 (Ref # 5)	112G0620	1
PEDAL SET GEAR CHANGE (Ref # 6)	13242-004	1
RUBBER CHANGE PEDAL (Ref # 7)	13157-004	1
LEVER-COMP CHANGE (Ref # 8)	13161-5001	1
LEVER-COMP CHANGE (Ref # 8)	13161-5001	1
SPRING,CHANGE LEVER (Ref # 9)	92144-1720	1
BOLT,RETURN SPRING (Ref # 10)	92001-1401	1
BOLT,RETURN SPRING (Ref # 10)	92001-1401	1
COLLAR (Ref # 11)	92027-121	1
SPRING,TENTION (Ref # 12)	92081-1129	1
LEVER,GEAR CHANGE DRM (Ref # 13)	13168-1046	1
BOLT,CHANGE DRUM LEVE (Ref # 14)	92150-1450	1
SPRING,CHNG DRUM LEV (Ref # 15)	92083-012	1
PLATE,GEAR CHANGE DRM (Ref # 16)	13169-1201	1
PLATE,GEAR CHANGE (Ref # 16)	13169-1253	1
SCREW PAN HEAD 6X12 (Ref # 17)	220B0612	1

© 2026 Kawasaki Motors Corp., U.S.A.