1976 KE100

PARTS DIAGRAM

GEAR CHANGE MECHANISM (KE100-A5/A6/A7/A8

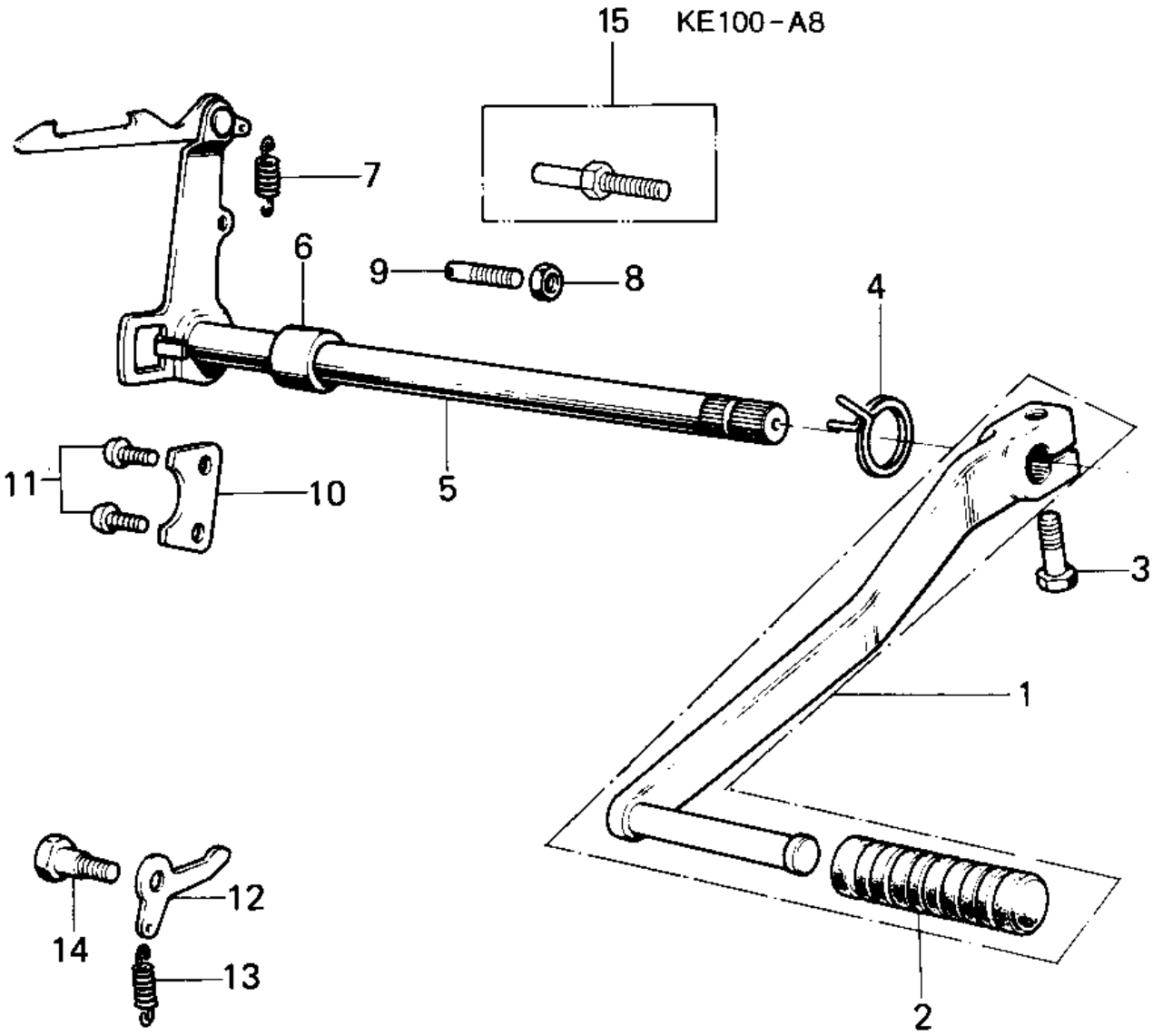

© 2026 Kawasaki Motors Corp., U.S.A.

1976 KE100

PARTS LIST

GEAR CHANGE MECHANISM (KE100-A5/A6/A7/A8

ITEM NAME	PART NUMBER	QUANTITY
PEDAL SET GEAR CHANGE (Ref # 1)	13242-004	1
RUBBER CHANGE PEDAL (Ref # 2)	13157-004	1
BOLT-UPSET,6X20 (Ref # 3)	112G0620	1
SPRING,TENTION (Ref # 4)	92081-1129	1
SPRING,TENTION (Ref # 4)	92081-1129	1
LEVER ASSY,GEAR CHNG (Ref # 5)	13161-1014	1
COLLAR (Ref # 6)	92027-121	1
SPRING,CHNG DRUM LEV (Ref # 7)	92083-012	1
SPRING,CHANGE LEVER (Ref # 7)	92144-1720	1
NUT 8MM (Ref # 8)	312B0800	1
BOLT,RETURN SPRING (Ref # 9)	92001-1401	1
PIN CHANGE PEDAL SPRG (Ref # 9)	92043-057	1
PLATE CHNG DRUM PSTN (Ref # 10)	13169-002	1
SCREW PAN HEAD 6X14 (Ref # 11)	220B0614	2
LEVER GEAR CHNG DRUM (Ref # 12)	13168-005	1
SPRING,CHNG DRUM LEV (Ref # 13)	92083-012	1
BOLT,CHANGE DRUM LEVE (Ref # 14)	92150-1450	1
BOLT,RETURN SPRING (Ref # 15)	92001-1401	1
BOLT,RETURN SPRING (Ref # 15)	92001-1401	1

© 2026 Kawasaki Motors Corp., U.S.A.