1976 KE100

PARTS DIAGRAM

TRANSMISSION (KE100-A9/A10)

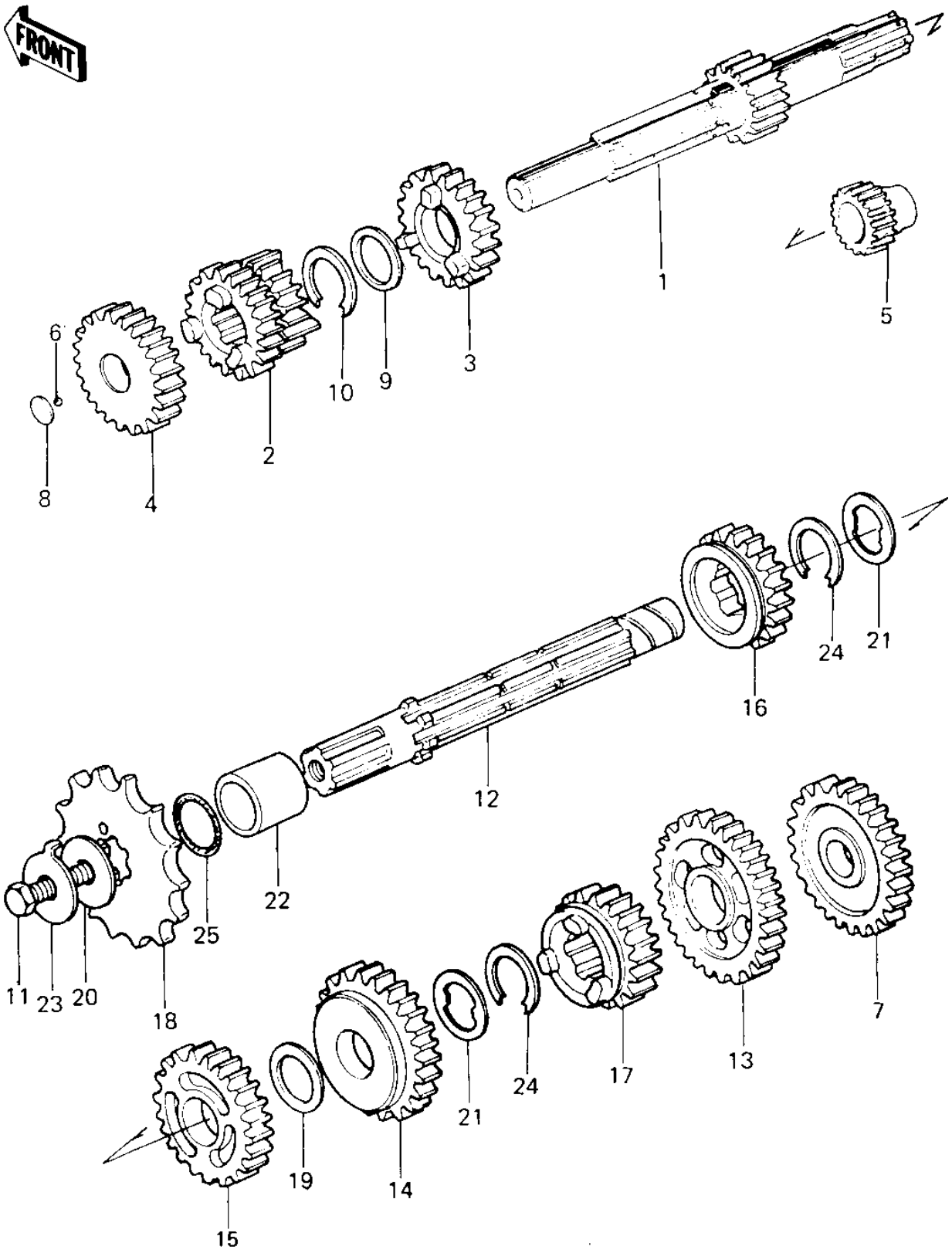

© 2026 Kawasaki Motors Corp., U.S.A.

1976 KE100

PARTS LIST

TRANSMISSION (KE100-A9/A10)

ITEM NAME	PART NUMBER	QUANTITY
SHAFT,DRIVE (Ref # 1)	13127-1017	1
2ND&3RD GEAR,DRIVE (Ref # 2)	13129-1138	1
4TH GEAR,DRIVE SHAFT (Ref # 3)	13129-1139	1
TOP GEAR,DRIVE SHAFT (Ref # 4)	13129-1146	1
PINION KICKSTARTER (Ref # 5)	13075-004	1
BALL STEEL 7/32' (Ref # 6)	600A0700	1
IDLE GEAR (Ref # 7)	13073-004	1
WASHER THRUST (Ref # 8)	92022-115	1
WASHER,PLAIN (Ref # 9)	92022-271	1
CIRCLIP (Ref # 10)	92033-014	1
BOLT-SMALL-UPSET,8X16 (Ref # 11)	115G0816	1
BOLT,UPSET,8X16 (Ref # 11)	92001-1368	1
SHAFT OUTPUT (Ref # 12)	13128-021	1
LOW GEAR OUTPUT SHAFT (Ref # 13)	13129-010	1
GEAR-OUTPUT 2ND,30T (Ref # 14)	13129-1642	1
3RD GEAR,OUTPUT SHAFT (Ref # 15)	13129-1148	1
TOP GEAR,OUTPUT SHAFT (Ref # 16)	13129-1149	1
GEAR-TRANSMISSION SPU (Ref # 17)	13129-1708	1
ENGINE SPROCKET,1ST (Ref # 18)	13144-054	1
SPROCKET-OUTPUT,14T (Ref # 18)	13144-1058	(1
ENGINE SPROCKET,13T (Ref # 18)	13144-053	(1
WASHER THRUST (Ref # 19)	92022-146	1
WASHER,ENGINE SPRCKT (Ref # 20)	92022-266	1
WASHER-LOCK (Ref # 21)	92024-030	2
COLLAR,ENG SPROCKET (Ref # 22)	92027-1595	1
WASHER,LOCK,8MM (Ref # 23)	92030-012	1
CIRCLIP (Ref # 24)	92033-014	2
"0" RING (Ref # 25)	92055-022	1

© 2026 Kawasaki Motors Corp., U.S.A.