# 1979 KE100

## PARTS DIAGRAM

### TRANSMISSION/CHANGE DRUM(KE100-A5/A6/A7/

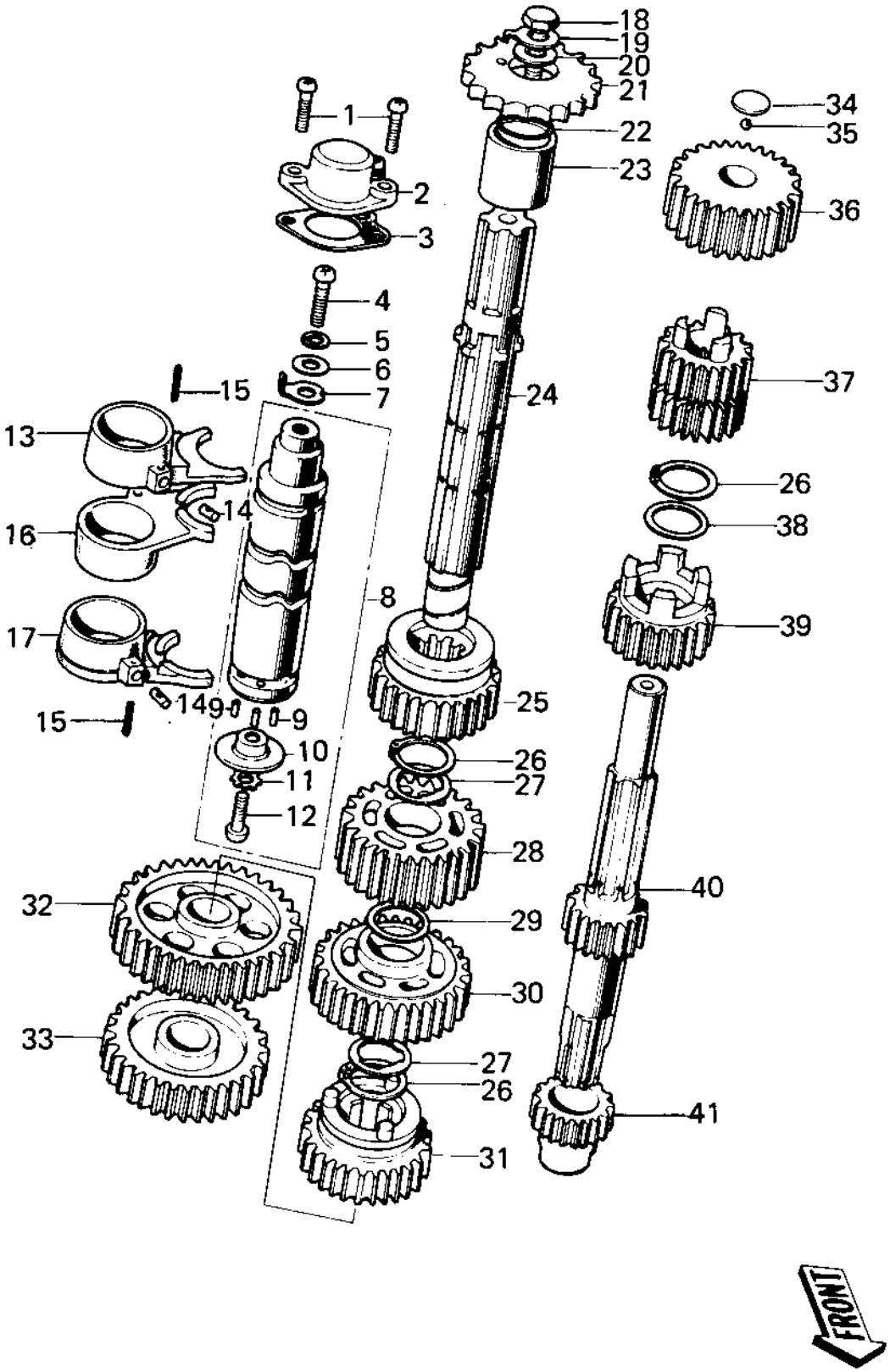


© 2026 Kawasaki Motors Corp., U.S.A.

# 1979 KE100

## PARTS LIST

## TRANSMISSION/CHANGE DRUM(KE100-A5/A6/A7/

| ITEM NAME | PART NUMBER | QUANTITY |
|---|---|---|
| SCREW PAN HEAD 6X16 (Ref # 1) | 220B0616 | |
| SWITCH,NEUTRAL (Ref # 2) | 13151-1002 | |
| SWITCH,NEUTRAL (Ref # 2) | 13151-1002 | |
| GASKET NEUTRAL SWITCH (Ref # 3) | 13146-002 | |
| SCREW PAN HEAD 6X16 (Ref # 4) | 220B0616 | |
| WASHER SPRING 6MM (Ref # 5) | 461F0600 | |
| WASHER PLAIN 6MM (Ref # 6) | 410B0600 | |
| ROTOR,NEUTRAL INDICTR (Ref # 7) | 21007-1003 | |
| ROTOR,NEUTRAL INDICTR (Ref # 7) | 21007-1003 | |
| DRUM ASSY-GEAR CHANGE (Ref # 8) | 13239-005 | |
| DRUM ASSY,GEAR CHANGE (Ref # 8) | 13239-1002 | |
| PIN GEAR CHANGE DRUM (Ref # 9) | 92042-014 | |
| PIN GEAR CHANGE DRUM (Ref # 9) | 92042-014 | |
| PLATE CHANGE DRUM PIN (Ref # 10) | 13142-008 | |
| WASHER LOCK 6MM (Ref # 11) | 464H0600 | |
| SCREW PAN HEAD 6X14 (Ref # 12) | 220B0614 | |
| FORK SELECTOR 3RD (Ref # 13) | 13140-009 | |
| PIN SELECT FORK GUIDE (Ref # 14) | 92043-005 | |
| PIN COTTER 3.0X20 (Ref # 15) | 550D3020 | |
| FORK SELECTOR 4TH-TOP (Ref # 16) | 13140-017 | |
| FORK SELECTOR LOW-2ND (Ref # 17) | 13140-010 | |
| BOLT-SMALL-UPSET,8X16 (Ref # 18) | 115G0816 | |
| WASHER,LOCK,8MM (Ref # 19) | 92030-012 | |
| WASHER,ENGINE SPRCKT (Ref # 20) | 92022-266 | |
| ENGINE SPROCKET,1ST (Ref # 21) | 13144-054 | |
| ENGINE SPROCKET,13T (Ref # 21) | 13144-053 | |
| SPROCKET-OUTPUT,14T (Ref # 21) | 13144-1058 | |
| "0" RING (Ref # 22) | 92055-022 | |
| COLLAR,ENG NPROCKET (Ref # 23) | 92027-179 | |

© 2026 Kawasaki Motors Corp., U.S.A.

# 1979 KE100

## PARTS LIST

## TRANSMISSION/CHANGE DRUM(KE100-A5/A6/A7/

| ITEM NAME | PART NUMBER | QUANTITY |
|---|---|---|
| COLLAR,ENG SPROCKET (Ref # 23) | 92027-1595 | |
| SHAFT OUTPUT (Ref # 24) | 13128-021 | |
| TOP GEAR OUTPUT SHAFT (Ref # 25) | 13137-012 | |
| CIRCLIP (Ref # 26) | 92033-014 | |
| WASHER-LOCK (Ref # 27) | 92024-030 | |
| 3RD GEAR OUTPUT SHAFT (Ref # 28) | 13133-005 | |
| WASHER THRUST (Ref # 29) | 92022-146 | |
| 2ND GEAR OUTPUT SHAFT (Ref # 30) | 13131-008 | |
| GEAR-TRANSMISSION SPU (Ref # 31) | 13129-1708 | |
| LOW GEAR OUTPUT SHAFT (Ref # 32) | 13129-010 | |
| IDLE GEAR (Ref # 33) | 13073-004 | |
| WASHER THRUST (Ref # 34) | 92022-115 | |
| BALL STEEL 7/32' (Ref # 35) | 600A0700 | |
| GEAR,INPUT TOP,24T (Ref # 36) | 13129-1927 | |
| 2ND&3RD GEAR,DRIVE (Ref # 37) | 13129-1052 | |
| 2ND&3RD GEAR,DRIVE (Ref # 37) | 13129-1052 | |
| WASHER THRUST (Ref # 38) | 92022-118 | |
| 4TH GEAR,DRIVE (Ref # 39) | 13129-1053 | |
| 4TH GEAR,DRIVE (Ref # 39) | 13129-1053 | |
| SHAFT,DRIVE (Ref # 40) | 13127-032 | |
| PINION KICKSTARTER (Ref # 41) | 13075-004 | |

© 2026 Kawasaki Motors Corp., U.S.A.