# 1981 KE100

## PARTS DIAGRAM

## CYLINDER HEAD/CYLINDER

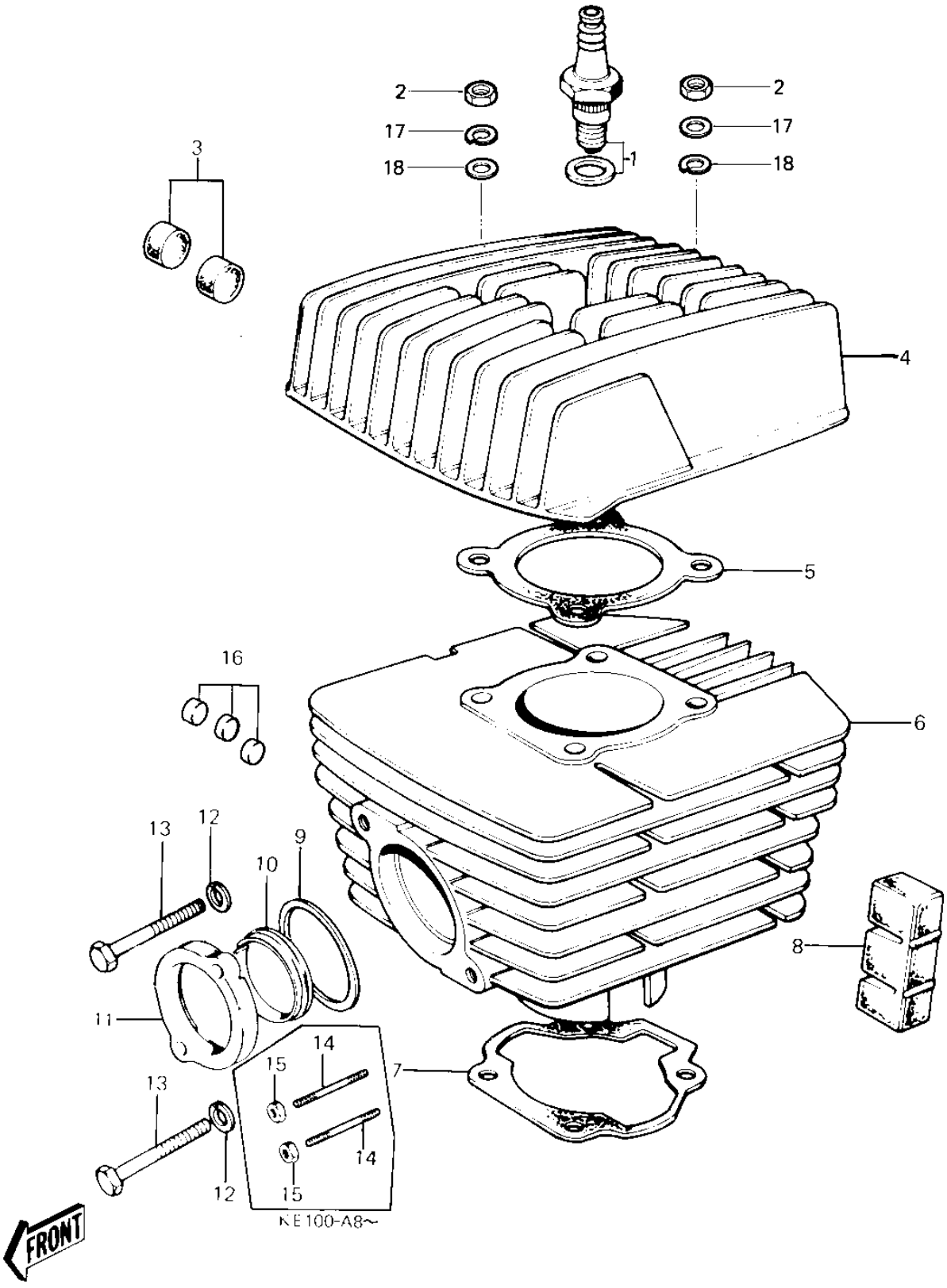


© 2026 Kawasaki Motors Corp., U.S.A.

# 1981 KE100

## PARTS LIST

## CYLINDER HEAD/CYLINDER

| ITEM NAME | PART NUMBER | QUANTITY |
|---|---|---|
| SPARK PLUGS B8HC (Ref # 1) | 92070-010 | 1 |
| SPARK PLUG B8ES (Ref # 1) | B8ES | 1 |
| NUT,8MM (Ref # 2) | 311B0800 | 4 |
| NUT-8MM (Ref # 2) | 92015-1022 | 4 |
| DAMPER RUBBER (Ref # 3) | 92075-074 | 8 |
| DAMPER RUBBER (Ref # 3) | 92075-075 | 6 |
| CYLINDER HEAD,BLACK (Ref # 4) | 11001-075-21 | 1 |
| HEAD-CYLINDER (Ref # 4) | 11001-1018 | 1 |
| CYLINDER HEAD (Ref # 4) | 11001-1008 | 1 |
| HEAD-CYLINDER (Ref # 4) | 11001-1018 | 1 |
| GASKET CYLINDER HEAD (Ref # 5) | 11004-033 | 1 |
| CYLINDER,BLACK (Ref # 6) | 11005-1027 | 1 |
| CYLINDER,BLACK (Ref # 6) | 11005-1027 | 1 |
| CYLINDER,ELECTRO-FUSE (Ref # 6) | 11005-1006 | 1 |
| CYLINDER (Ref # 6) | 11005-1082 | 1 |
| GASKET,CYLINDER BASE (Ref # 7) | 11060-1200 | 1 |
| DAMPER RUBBER,CYLIND (Ref # 8) | 92075-170 | 2 |
| GASKET,EXHAUST PIPE (Ref # 9) | 11009-1992 | 1 |
| GASKET,EXHAUST PIPE (Ref # 9) | 11009-1992 | 1 |
| INSERT,EXH PIPE HLDR (Ref # 10) | 18070-008 | 1 |
| HOLDER,EXHAUST PIPE (Ref # 11) | 18069-048 | 1 |
| WASHER SPRING 6MM (Ref # 12) | 461F0600 | 2 |
| BOLT-UPSET (Ref # 13) | 112G0625 | 2 |
| STUD (Ref # 14) | 92004-029 | 2 |
| NUT,LOCK 6MM (Ref # 15) | 92017-014 | 2 |
| NUT-6MM (Ref # 15) | 92015-1078 | 2 |
| DAMPER RUBBER-CYL-HD (Ref # 16) | 92075-109 | 8 |
| WASHER SPRING 8MM (Ref # 17) | 461F0800 | 4 |
| WASHER PLAIN 8MM (Ref # 18) | 410B0800 | 4 |

© 2026 Kawasaki Motors Corp., U.S.A.