1975 G5-C

PARTS DIAGRAM

FRAME/FRAME FITTINGS ('74-'75 B/C)

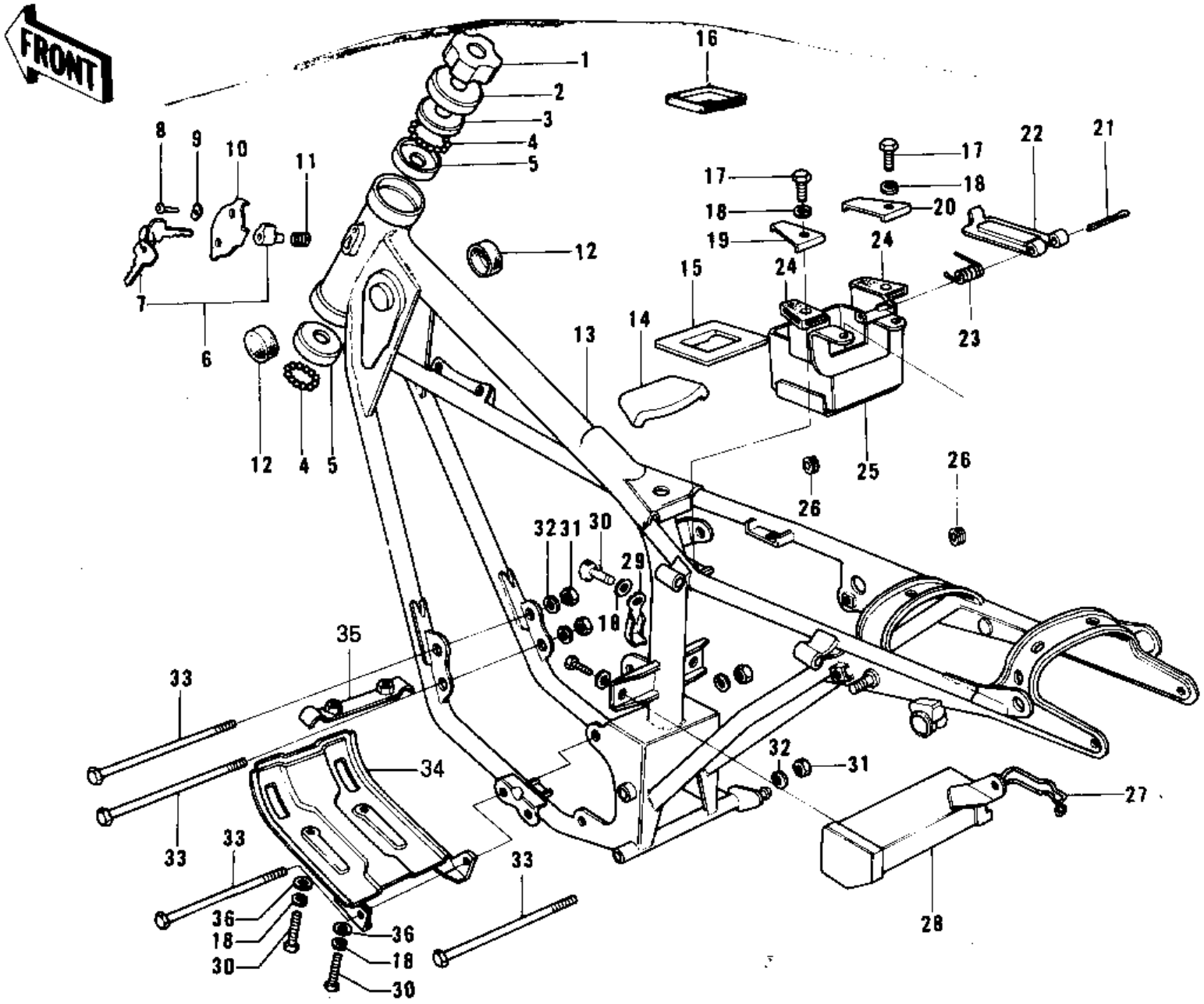

© 2026 Kawasaki Motors Corp., U.S.A.

1975 G5-C

PARTS LIST

FRAME/FRAME FITTINGS ('74-'75 B/C)

ITEM NAME	PART NUMBER	QUANTITY
NUT STEERING STEM LCK (Ref # 1)	92090-006	
CAP STEERING STEM (Ref # 2)	46098-004	
CONE UPPER BEARING (Ref # 3)	92047-005	
BALL STEEL 3/16' (Ref # 4)	600A0600	
RACE BEARING (Ref # 5)	92048-004	
LOCK ASSY,STEERING (Ref # 6)	27016-042	
KEY SET,#401 (Ref # 7)	27008-063-01	
KEY SET,#402 (Ref # 7)	27008-063-02	
KEY SET,#403 (Ref # 7)	27008-063-03	
KEY SET,#404 (Ref # 7)	27008-063-04	
KEY SET,#405 (Ref # 7)	27008-063-05	
KEY SET,#406 (Ref # 7)	27008-063-06	
KEY SET,#407 (Ref # 7)	27008-063-07	
KEY SET,#408 (Ref # 7)	27008-063-08	
KEY SET,#409 (Ref # 7)	27008-063-09	
KEY SET,#410 (Ref # 7)	27008-063-10	
KEY SET,#411 (Ref # 7)	27008-063-11	
KEY SET,#412 (Ref # 7)	27008-063-12	
KEY SET,#413 (Ref # 7)	27008-063-13	
KEY SET,#414 (Ref # 7)	27008-063-14	
KEY SET,#415 (Ref # 7)	27008-063-15	
SCREW-TAPPING (Ref # 8)	92008-007	
WASHER (Ref # 9)	92097-003	
CAP,STEERING LOCK (Ref # 10)	11012-1134	
SPRING-STEERING LOCK (Ref # 11)	27032-001	
DAMPER RUBBER-FL TANK (Ref # 12)	92075-101	
FRAME (Ref # 13)	32002-072	
DAMPER RUBBER-FL TANK (Ref # 14)	92075-106	
MAT-BATTERY (Ref # 15)	32103-024	

© 2026 Kawasaki Motors Corp., U.S.A.

1975 G5-C

PARTS LIST

FRAME/FRAME FITTINGS ('74-'75 B/C)

ITEM NAME	PART NUMBER	QUANTITY
MAT-BATTERY (Ref # 16)	32103-018	
BOLT-UPSET (Ref # 17)	112G0618	
WASHER SPRING 6MM (Ref # 18)	461F0600	
PLATE-BATTERY CASE,LH (Ref # 19)	32101-003	
PLATE-BATTERY CASE,RH (Ref # 20)	32101-004	
PIN-COTTER,2.5X35 (Ref # 21)	550D2535	
BAND-BATTERY (Ref # 22)	92072-037	
SPRING-RETURN (Ref # 23)	92083-017	
DAMPER RUBBER (Ref # 24)	92075-108	
CASE,BATTERY (Ref # 25)	32097-034	
GROMMET (Ref # 26)	92071-056	
SPARK PLUG B6HS (Ref # 27)	B6HS	
CASE-TOOL (Ref # 28)	32098-018	
CLAMP-BREATHER PIPE (Ref # 29)	92037-070	
BOLT-UPSET 6X14 (Ref # 30)	112B0614	
NUT,10MM (Ref # 31)	314B1000	
WASHER SPRING 10MM (Ref # 32)	461F1000	
BOLT,FLANGED,10X115 (Ref # 33)	92001-1603	
GUARD, ENGINE (Ref # 34)	55011-018	
BRACKET,ENGINE GUARD (Ref # 35)	55016-007	
WASHER PLAIN 6MM (Ref # 36)	410B0600	

© 2026 Kawasaki Motors Corp., U.S.A.