1974 G4TR-D

PARTS DIAGRAM

CARBURETOR G4TR-E,KV100-A7 ('74-'75)

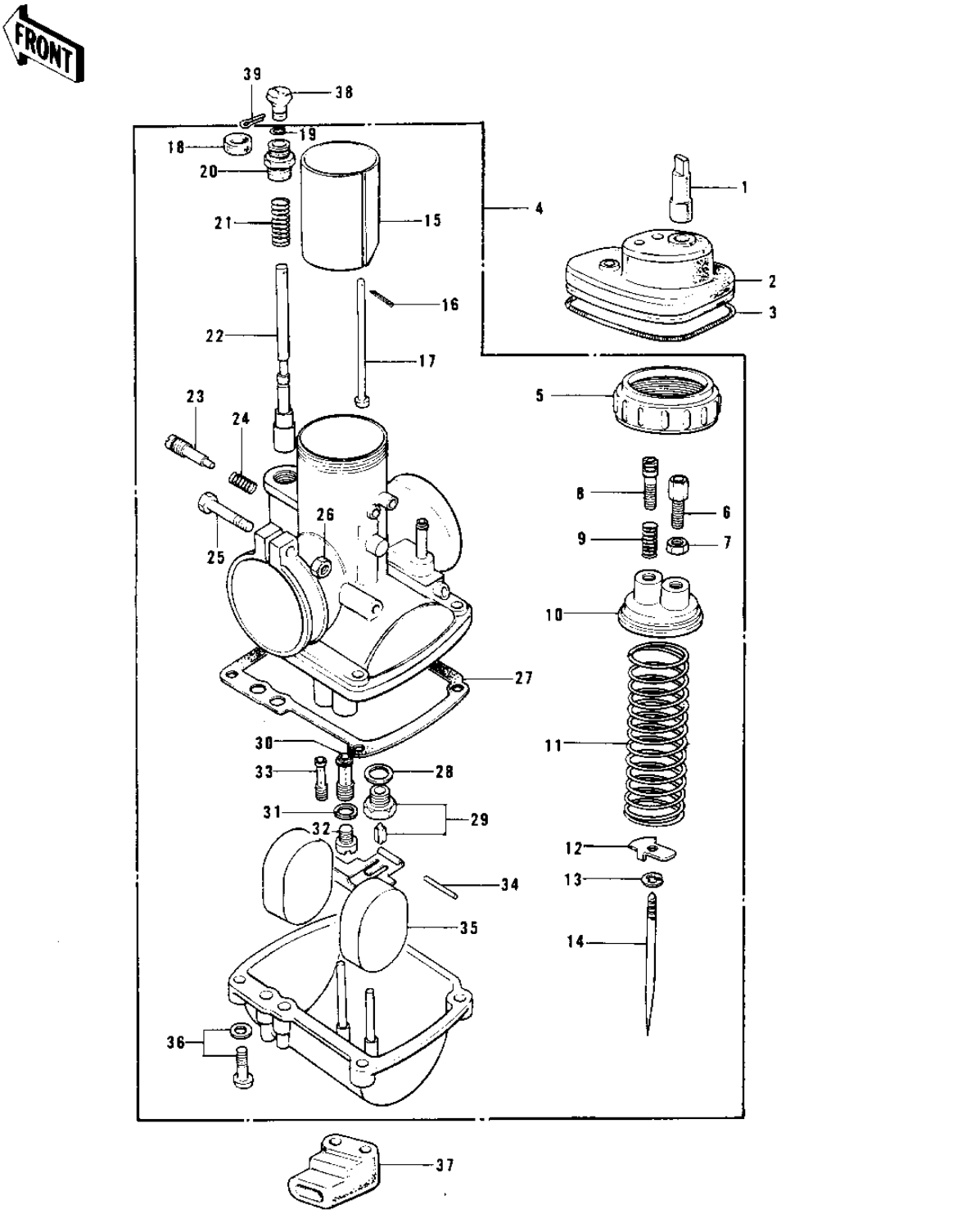

© 2026 Kawasaki Motors Corp., U.S.A.

1974 G4TR-D

PARTS LIST

CARBURETOR G4TR-E,KV100-A7 ('74-'75)

ITEM NAME	PART NUMBER	QUANTITY
PLUG,CARBURETOR CAP (Ref # 1)	16147-001	
CAP,CARBURETOR (Ref # 2)	14038-035	
SPRING COIL (Ref # 3)	92081-047	
CARBURETOR ASSY (Ref # 4)	16001-233	
CAP MIXING CHAMBER (Ref # 5)	16004-010	
CABLE ADJUSTER (Ref # 6)	16002-002	
NUT CABLE ADJUST LOCK (Ref # 7)	16003-004	
SCREW,THROTTLE STOP (Ref # 8)	16021-002	
SPRING THR STOP SCREW (Ref # 9)	16022-005	
TOP MIXING CHAMBER (Ref # 10)	16005-005	
SPRING THROTTLE VALVE (Ref # 11)	16006-013	
SPRING SEAT,THRTL TL (Ref # 12)	16007-020	
CIRCLIP (Ref # 13)	16008-010	
JET NEEDLE 4EJ7 (Ref # 14)	16009-059	
VALVE,THROTTLE CA2.0 (Ref # 15)	16025-057	
PIN COTTER 1.2X10 (Ref # 16)	550D1210	
ROD,THROTTLE VLV STP (Ref # 17)	16024-012	
CAP,STARTER PLUNGER (Ref # 18)	16036-012	
CIRCLIP (Ref # 19)	92037-1077	
CAP STARTER PLUNGER (Ref # 20)	16012-010	
SPRING,STARTER PLUNGR (Ref # 21)	16013-010	
PLUNGER,STARTER (Ref # 22)	16016-012	
SCREW PILOT AIR ADJST (Ref # 23)	16014-002	
SPRING-THR STOP SCREW (Ref # 24)	16022-007	
SCREW CLAMP (Ref # 25)	16010-004	
NUT 6MM (Ref # 26)	311B0600	
GASKET,FLOAT CHAMBER (Ref # 27)	16019-021	
WASHER VALVE SEAT (Ref # 28)	16029-002	
FLOAT VALVE ASSY (Ref # 29)	16030-001	

© 2026 Kawasaki Motors Corp., U.S.A.

1974 G4TR-D

PARTS LIST

CARBURETOR G4TR-E,KV100-A7 ('74-'75)

ITEM NAME	PART NUMBER	QUANTITY
NEEDLE JET O-4 (Ref # 30)	16017-081	
WASHER MAIN JET (Ref # 31)	16034-001	
MAIN JET NO 75R (Ref # 32)	92063-109	
MAIN JET,#70R (Ref # 32)	92063-1012	
MAIN JET NO 72.5R (Ref # 32)	92063-108	
MAIN JET,#77.5R (Ref # 32)	92063-1032	
MAIN JET, #A80 (Ref # 32)	92063-1030	
PILOT JET #17.5 ISO (Ref # 33)	92064-020	
FLOAT PIN (Ref # 34)	16032-003	
FLOAT (Ref # 35)	16031-015	
SCREW-FLOAT CHAMBER (Ref # 36)	16033-012	
GROMMET,OVER FLOW (Ref # 37)	16136-007	
KNOB,CARBURETOR (Ref # 38)	92077-022	
PIN COTTER 1.6X15 (Ref # 39)	550D1615	

© 2026 Kawasaki Motors Corp., U.S.A.