1974 G4TR-D

PARTS DIAGRAM

CYLINDER HEAD/CYLINDER ('70-'73)

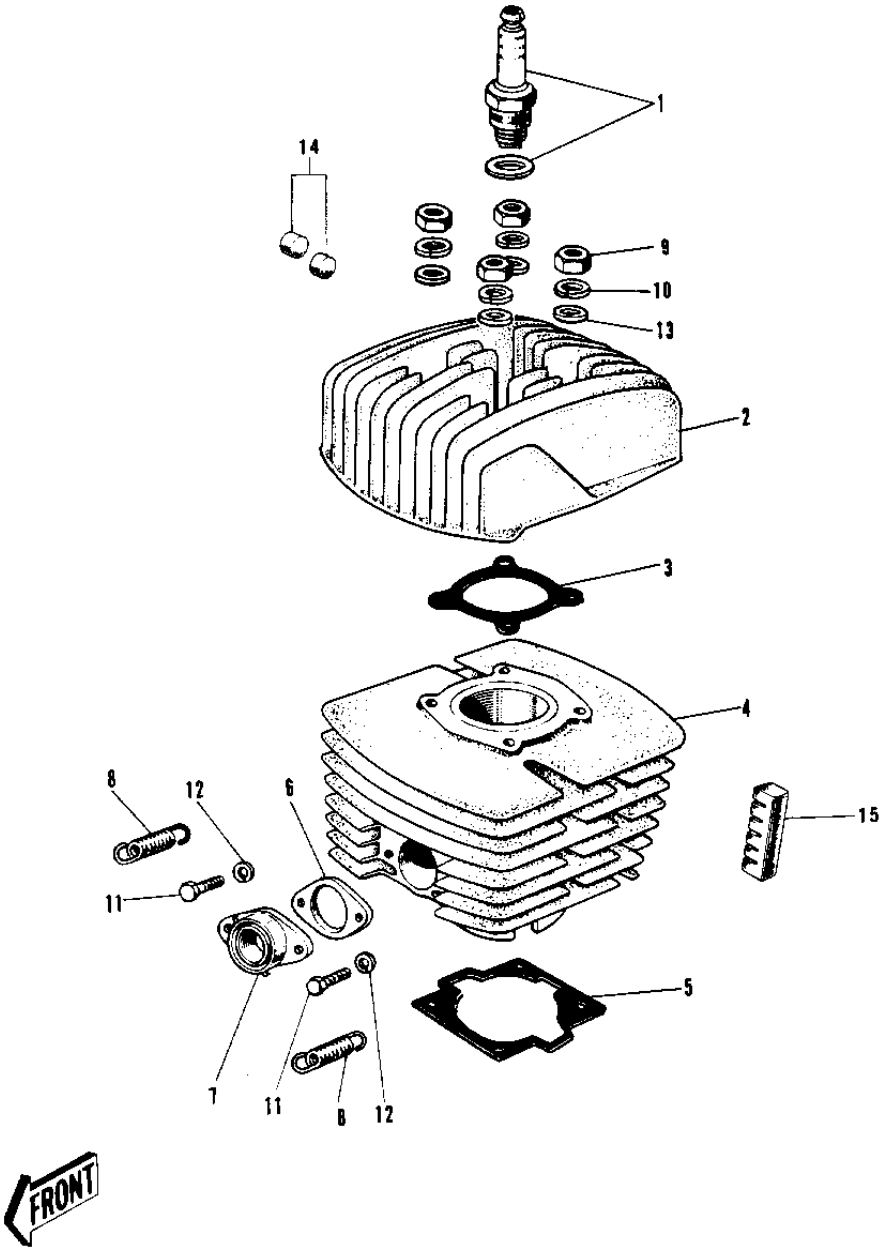

© 2026 Kawasaki Motors Corp., U.S.A.

1974 G4TR-D

PARTS LIST

CYLINDER HEAD/CYLINDER ('70-'73)

ITEM NAME	PART NUMBER	QUANTITY
UNAVAILABLE IN PRICE BOOK (Ref # 1)	92070-001A	
CYLINDER HEAD,F.BLACK (Ref # 2)	11001-038-21	
CYLINDER HEAD,F.BLACK (Ref # 2)	11001-038-21	
GASKET CYLINDER HEAD (Ref # 3)	11004-033	
CYLINDER,FLAT BLACK (Ref # 4)	11005-061-21	
CYLINDER,FLAT BLACK (Ref # 4)	11005-061-21	
GASKET CYLINDER BASE (Ref # 5)	11009-009	
GASKET EXH PIPE CLAMP (Ref # 6)	18067-005	
HOLDER EXHAUST PIPE (Ref # 7)	18069-028	
SPRING CONNECTOR (Ref # 8)	18071-001	
NUT,8MM (Ref # 9)	311B0800	
WASHER SPRING 8MM (Ref # 10)	461F0800	
BOLT-UPSET,6X20 (Ref # 11)	112G0620	
WASHER SPRING 6MM (Ref # 12)	461F0600	
WASHER PLAIN 8MM (Ref # 13)	410B0800	
DAMPER RUBBER-CYL-HD (Ref # 14)	92075-109	
DAMPER RUBBER-CYL (Ref # 15)	92075-110	

© 2026 Kawasaki Motors Corp., U.S.A.