1972 G3SS-B

PARTS DIAGRAM

AIR CLEANER ('69-'73)

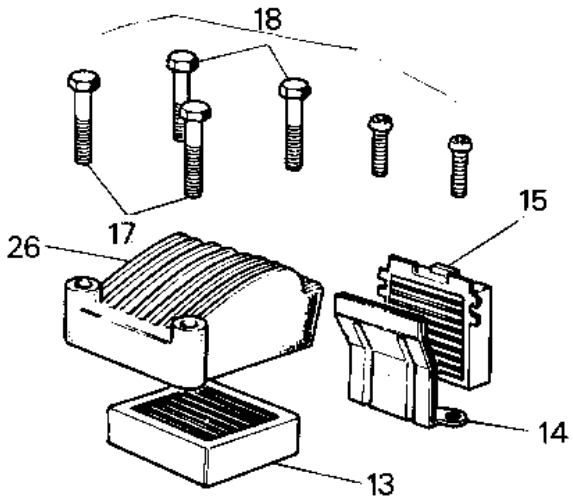

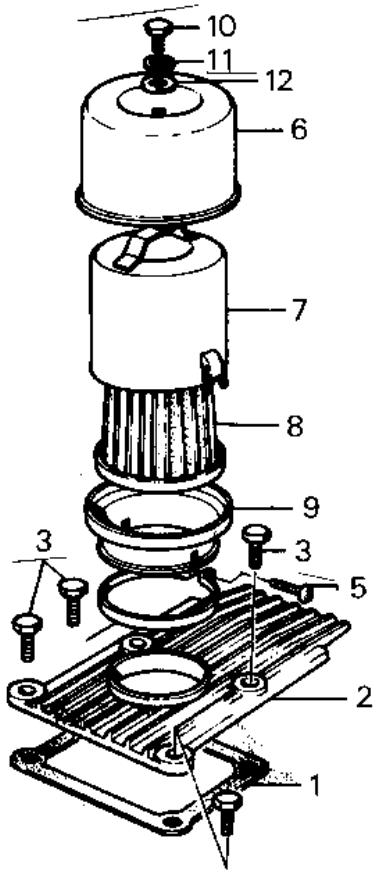



© 2026 Kawasaki Motors Corp., U.S.A.

1972 G3SS-B

PARTS LIST

AIR CLEANER ('69-'73)

ITEM NAME	PART NUMBER	QUANTITY
ELEMENT,AIR CLNR (Ref # 13)	11013-007	1
BAFFLE PLT AIR CLEAN (Ref # 14)	11019-001	1
SCREEN AIR CLEANER (Ref # 15)	14037-001	1
COVER AIR CLEANER (Ref # 16)	14041-001	1
BOLT-UPSET,6X40 (Ref # 17)	112G0640	2
BOLT-UPSET,6X40 (Ref # 17)	112G0640	AL
BOLT,6X70 (Ref # 18)	110G0670	2

© 2026 Kawasaki Motors Corp., U.S.A.