1971 G3SS-A

PARTS DIAGRAM

CRANKSHAFT/PISTON /ROTARY VALVE ('69-'73

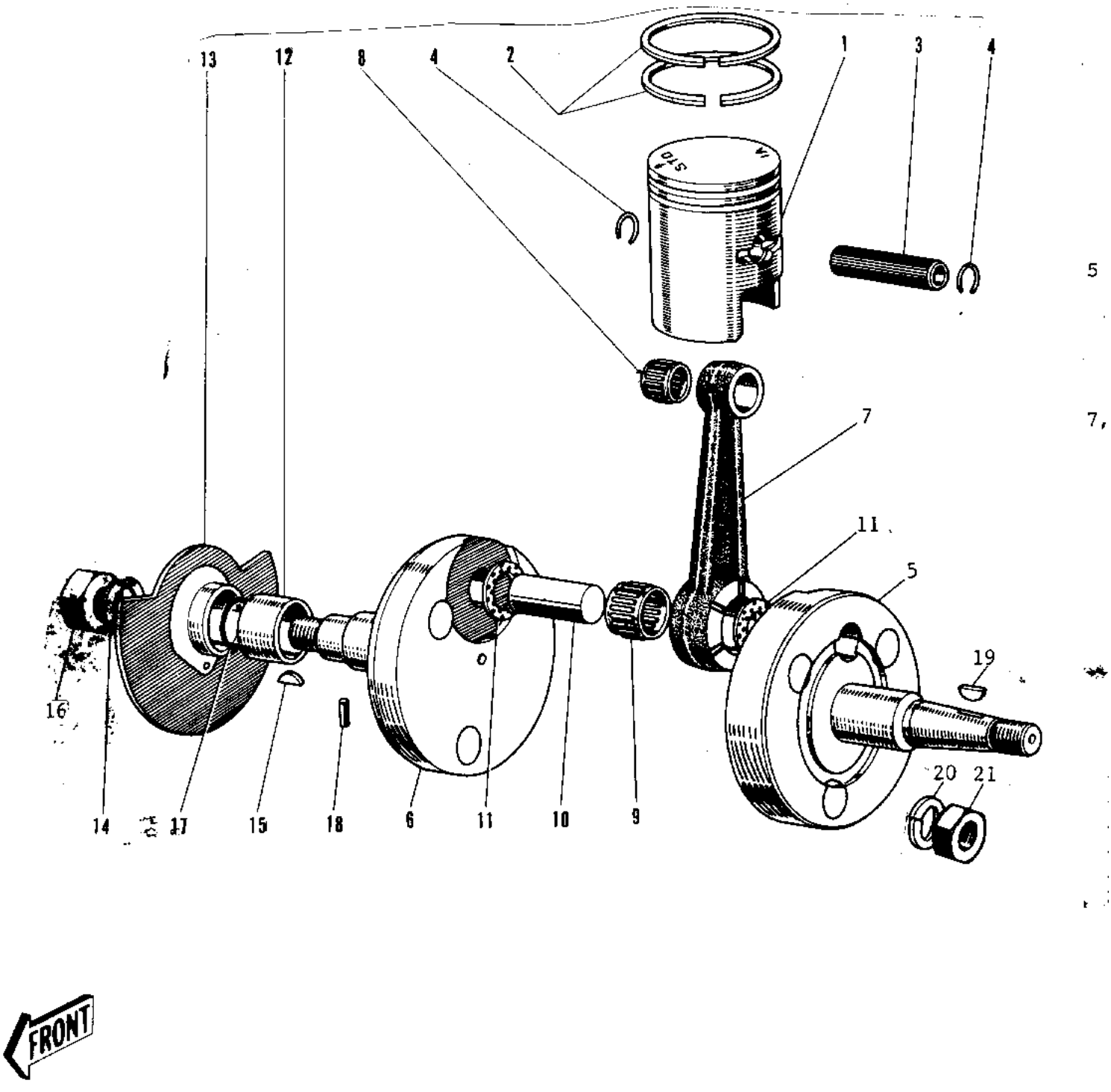

© 2026 Kawasaki Motors Corp., U.S.A.

1971 G3SS-A

PARTS LIST

CRANKSHAFT/PISTON /ROTARY VALVE ('69-'73

ITEM NAME	PART NUMBER	QUANTITY
PISTON STD (Ref # 1)	13001-015	1
PISTON STD (Ref # 1)	13001-037	1
RING SET STD (Ref # 2)	13008-011	1
RING SET STD (Ref # 2)	13008-023	1
PIN-PISTON (Ref # 3)	13002-007	1
CIRCLIP PISTON PIN (Ref # 4)	92036-007	2
CRANK&CONROD ASSY (Ref # 5~11)	13036-034	N/
CRANK&CONROD ASSY (Ref # 5~11)	13036-034	1
CRANKSHAFT L.H (Ref # 5)	13037-018	1
CRANKSHAFT,L.H (Ref # 5)	13037-044	1
CRANKSHAFT R.H (Ref # 6)	13038-012	1
CRANKSHAFT,R.H (Ref # 6)	13038-040	1
CONNECTING ROD SET (Ref # 7,9~11)	13044-008	1
CONNECTING ROD SET (Ref # 7,9~11)	13044-019	1
BRG N72KTV030 (Ref # 8)	13033-028	1
NEEDLE BEARING BG END (Ref # 9)	13034-018	1
NEEDLE BEARING-BG END (Ref # 9)	13034-025	1
CRANK PIN (Ref # 10)	13035-008	1
CRANK PIN (Ref # 10)	13035-025	1
WASHER SIDE (Ref # 11)	92025-005	2
WASHER-SIDE (Ref # 11)	92025-047	2
COLLAR CRANKSHAFT (Ref # 12)	92027-022	1
VALVE ROTARY DISC (Ref # 13)	12001-004	1
WASHER LOCK 12MM (Ref # 14)	92024-003	1
WOODRUFF KEY PRY PINI (Ref # 15)	92038-003	1
NUT 12MM (Ref # 16)	92015-006	1
"0" RING,16MM (Ref # 17)	670B2016	1
PIN DOWEL 4X8 (Ref # 18)	610A0408	1
WOODRUFF KEY (Ref # 19)	510A3200	1

© 2026 Kawasaki Motors Corp., U.S.A.

1971 G3SS-A

PARTS LIST

CRANKSHAFT/PISTON /ROTARY VALVE ('69-'73

ITEM NAME	PART NUMBER	QUANTITY
WASHER SPRING 10MM (Ref # 20)	461F1000	1
NUT,10MM (Ref # 21)	314B1000	1

© 2026 Kawasaki Motors Corp., U.S.A.