1975 MC1M-A

PARTS DIAGRAM

AIR CLEANER/MUFFLER ('74-'75 MC1M/MC1M-A

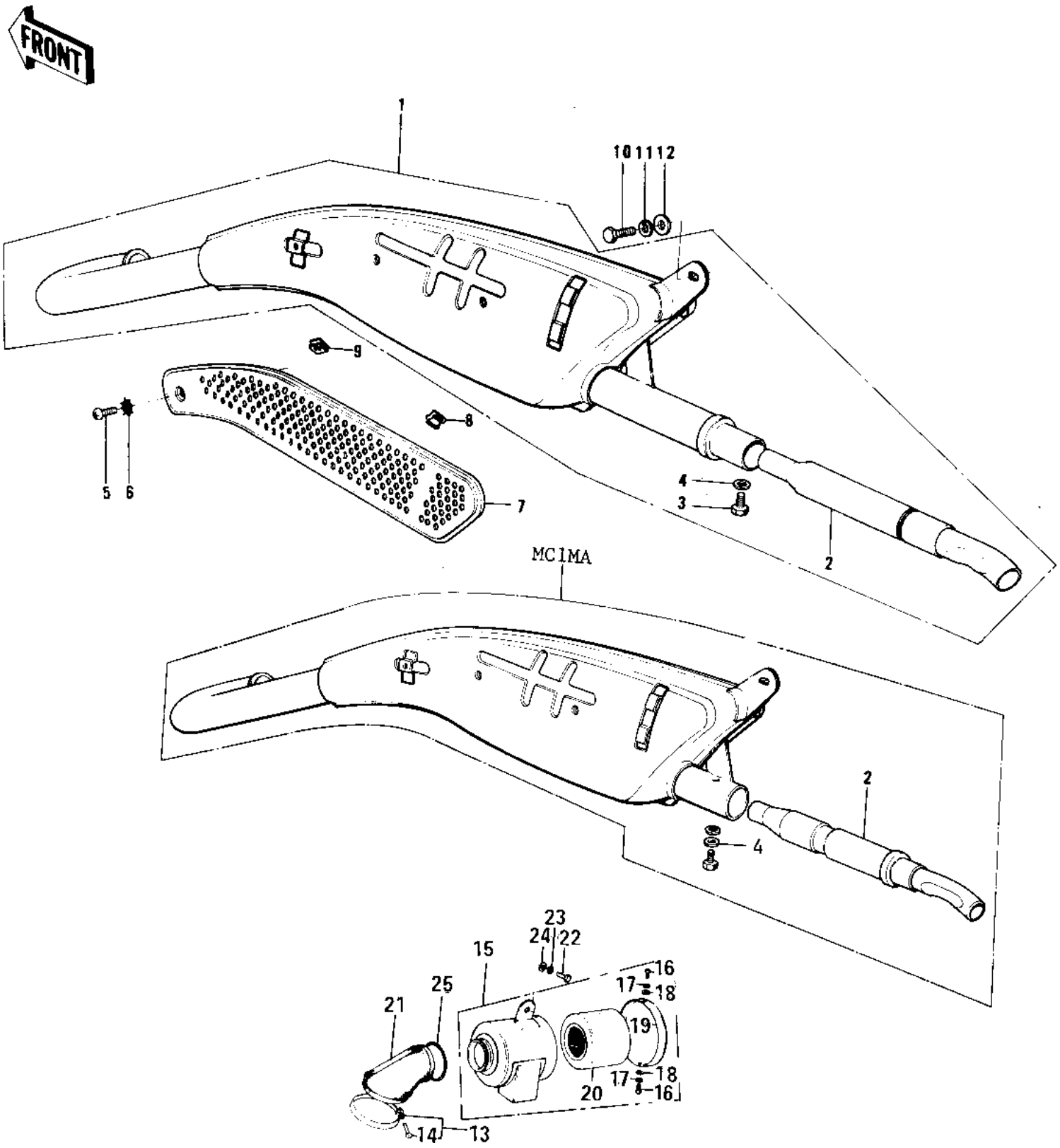

© 2026 Kawasaki Motors Corp., U.S.A.

1975 MC1M-A

PARTS LIST

AIR CLEANER/MUFFLER ('74-'75 MC1M/MC1M-A

ITEM NAME	PART NUMBER	QUANTITY
MUFFLER ASSY,F.BLACK (Ref # 1)	18001-167-21	
MUFFLER ASSY,F.BLACK (Ref # 1)	18001-167-21	
BAFFLE TUBE (Ref # 2)	18033-083	
BAFFLE TUBE (Ref # 2)	18033-088	
BOLT,6X10 (Ref # 3)	112G0610	
WASHER-PLAIN (Ref # 4)	92022-183	
WASHER PLAIN 6MM (Ref # 4)	410B0600	
SCREW PAN HEAD 6X12 (Ref # 5)	220E0612	
WASHER LOCK 6MM (Ref # 6)	463H0600	
COVER,MUFFLER (Ref # 7)	18064-018	
INSULATOR (Ref # 8)	18065-007	
INSULATOR-HEAT (Ref # 9)	18065-009	
BOLT-SMALL-UPSET,8X16 (Ref # 10)	115G0816	
WASHER SPRING 8MM (Ref # 11)	461F0800	
WASHER PLAIN 8MM (Ref # 12)	411B0800	
CLAMP-AIR CLEANER (Ref # 13)	92037-068	
SCREW PAN HEAD 6X35 (Ref # 14)	220B0635	
AIR CLEANER ASY,BLACK (Ref # 15)	11010-068-10	
SCREW PAN HEAD 5X8 (Ref # 16)	220B0508	
WASHER SPRING 5MM (Ref # 17)	461F0500	
WASHER PLAIN 5MM (Ref # 18)	411B0500	
CAP,AIR CLEANER (Ref # 19)	11012-041	
ELEMENT,AIR,CLNR (Ref # 20)	11013-044	
CONNECTOR,AIR CLEANER (Ref # 21)	11026-009	
SCREW PAN HEAD 6X12 (Ref # 22)	220B0612	
WASHER SPRING 6MM (Ref # 23)	461F0600	
WASHER PLAIN 6MM (Ref # 24)	410B0600	
SPRING COIL (Ref # 25)	92081-047	

© 2026 Kawasaki Motors Corp., U.S.A.