1975 MC1M-A

PARTS DIAGRAM

IGNITION/GENERATOR/RECTIFIER

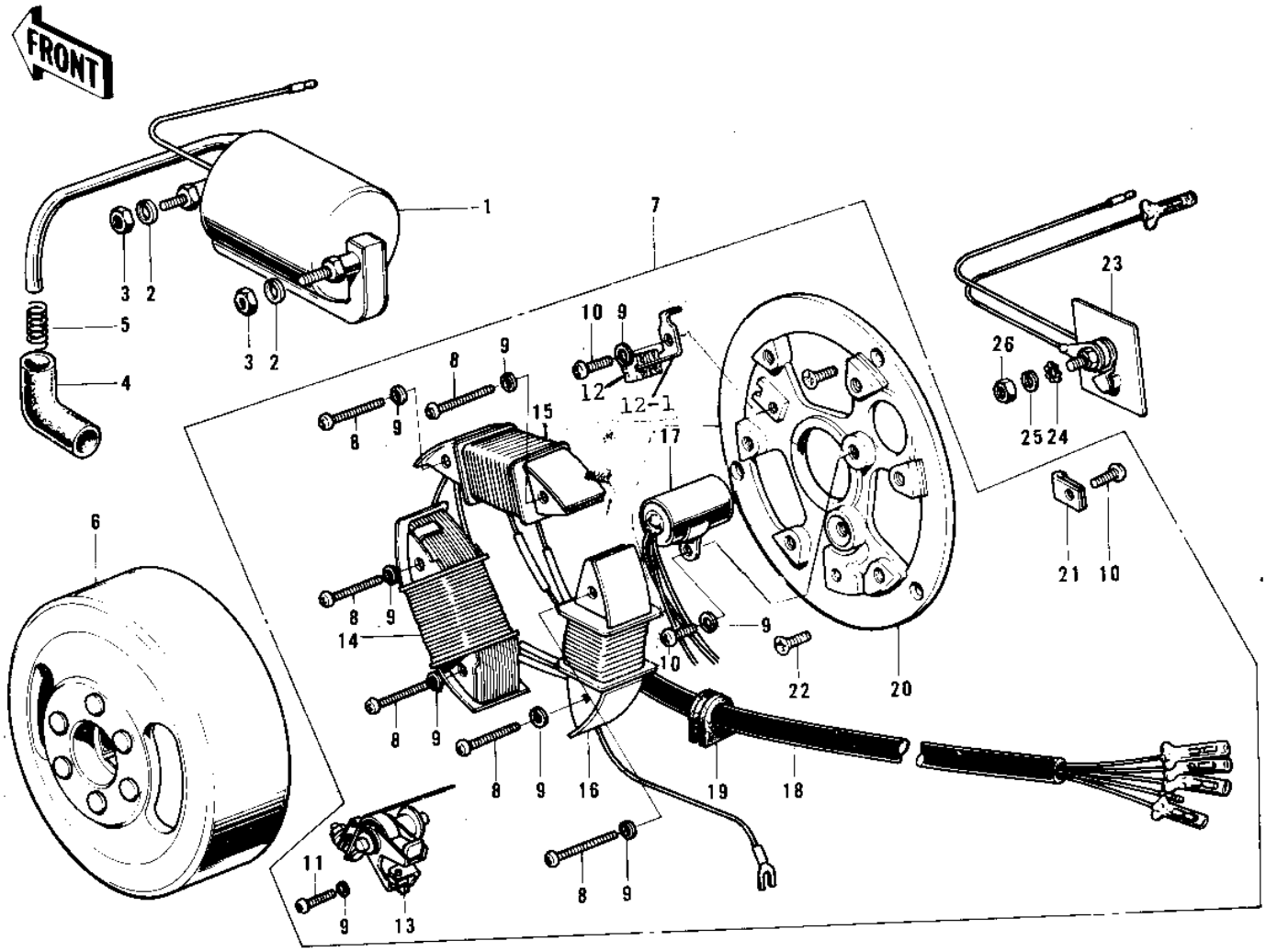

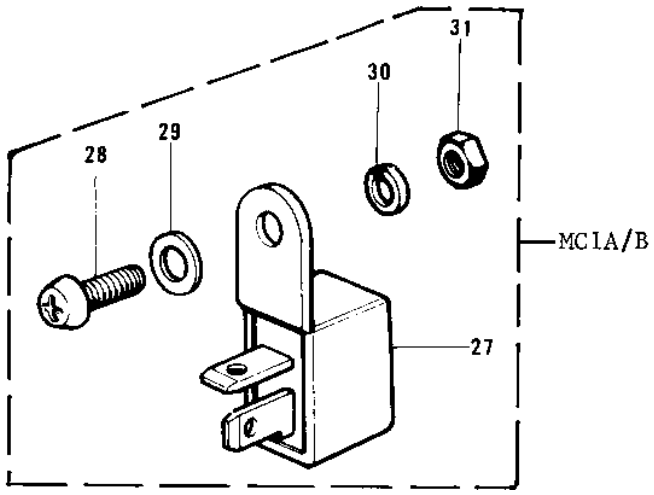

© 2026 Kawasaki Motors Corp., U.S.A.

1975 MC1M-A

PARTS LIST

IGNITION/GENERATOR/RECTIFIER

ITEM NAME	PART NUMBER	QUANTITY
COIL,IGNITION (Ref # 1)	21121-1047	
WASHER SPRING 6MM (Ref # 2)	461F0600	
NUT 6MM (Ref # 3)	311B0600	
CAP SPARK PLUG (Ref # 4)	21130-009	
SPRING-SPARK PLUG CAP (Ref # 5)	92101-001	
MAGNETO ASSY (Ref # 6)	21002-1055	
FLYWHEEL (Ref # 6)	21050-017	
MAGNETO ASSY (Ref # 7)	21002-1055	
STATOR ASSY (Ref # 7)	21003-027	
SCREW PAN HEAD 4X30 (Ref # 8)	220E0430	
WASHER SPRING 4MM (Ref # 9)	461F0400	
SCREW PAN HEAD 4X6 (Ref # 10)	220B0406	
SCREW-PAN-CRSOSS,4X12 (Ref # 11)	220B0412	
FELT OIL (Ref # 12)	21019-005	
HOLDER,OIL FELT (Ref # 12-1)	21038-002	
BREAKER ASSY CONTACT (Ref # 13)	21008-006	
COIL PRIMARY (Ref # 14)	21049-006	
COIL A,LIGHTING (Ref # 14)	21047-022	
COIL LIGHTING A (Ref # 15)	21047-010	
COIL A LIGHTING (Ref # 15)	21047-019	
COIL LIGHTING B (Ref # 16)	21047-011	
COIL,EXCITING (Ref # 16)	21049-1004	
COIL,EXCITING (Ref # 16)	21049-1004	
CONDENSER (Ref # 17)	21013-006	
WIRING HARNESS,MAGNTO (Ref # 18)	21029-025	
WIRING HARNESS,MAGNT (Ref # 18)	21029-031	
GROMMET WIRING HARN (Ref # 19)	21017-002	
PLATE-COIL,MAGNETO (Ref # 20)	21048-1002	
PLATE-COIL,MAGNETO (Ref # 20)	21048-1002	

© 2026 Kawasaki Motors Corp., U.S.A.

1975 MC1M-A

PARTS LIST

IGNITION/GENERATOR/RECTIFIER

ITEM NAME	PART NUMBER	QUANTITY
CLAMP WIRING HARNESS (Ref # 21)	21037-002	
SCREW CNTSNK HD 6X14 (Ref # 22)	221B0614	
RECTIFIER (Ref # 23)	21061-5001	
WASHER LOCK 5MM (Ref # 24)	464H0500	
WASHER SPRING 5MM (Ref # 25)	461F0500	
NUT,5MM (Ref # 26)	311B0500	
RECTIFIER (Ref # 27)	21061-015	
SCREW PAN HEAD 5X10 (Ref # 28)	220B0510	
WASHER PLAIN 5MM (Ref # 29)	411B0500	
WASHER SPRING 5MM (Ref # 30)	461F0500	
NUT,5MM (Ref # 31)	311B0500	

© 2026 Kawasaki Motors Corp., U.S.A.