1973 Midi-Bike

PARTS DIAGRAM

CYLINDER HEAD/CYLINDER ('73-'75 MC1/MC1-

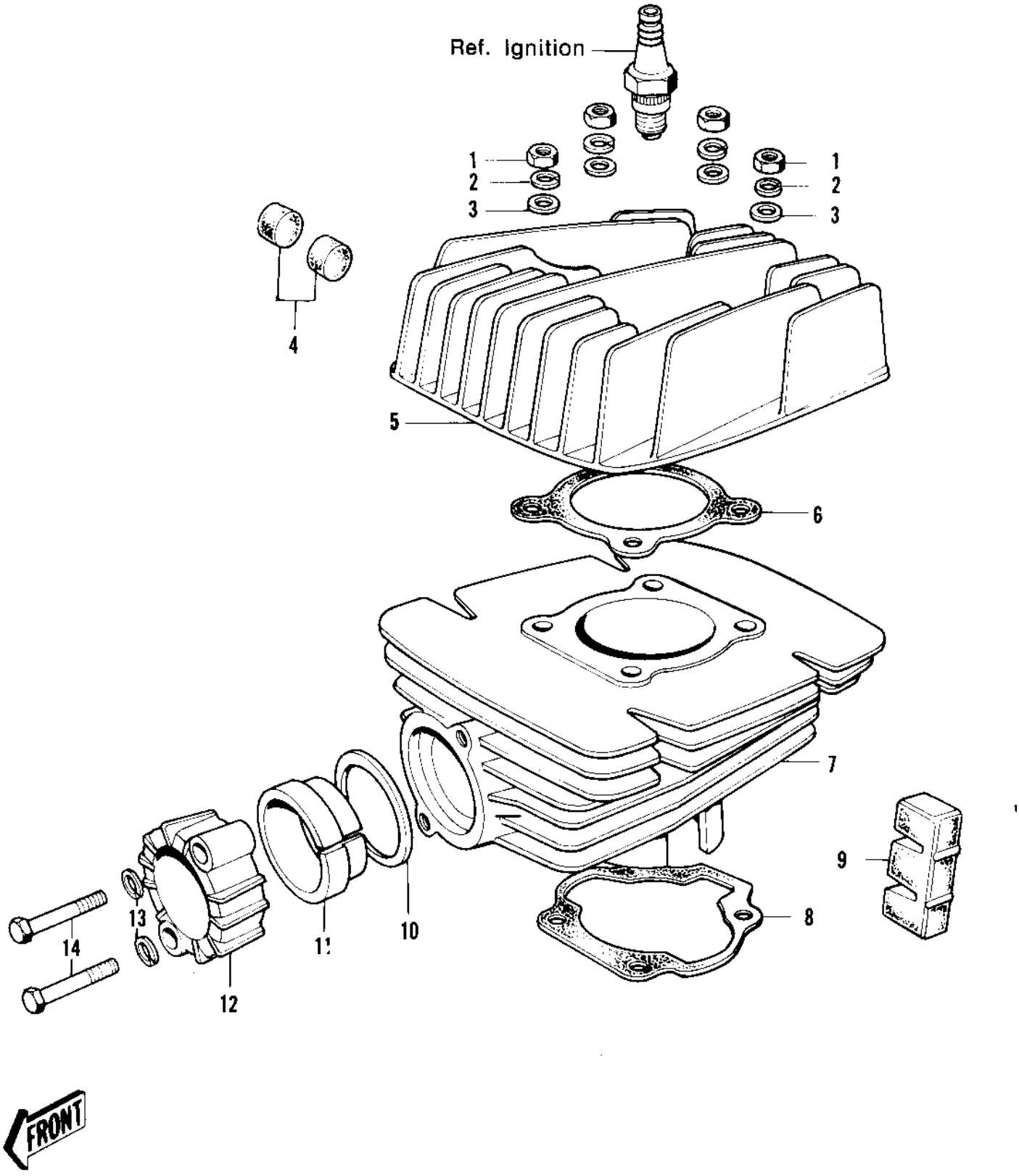

© 2026 Kawasaki Motors Corp., U.S.A.

1973 Midi-Bike

PARTS LIST

CYLINDER HEAD/CYLINDER ('73-'75 MC1/MC1-

ITEM NAME	PART NUMBER	QUANTITY
NUT,8MM (Ref # 1)	311B0800	4
NUT,8MM (Ref # 1)	311B0800	4
WASHER SPRING 8MM (Ref # 2)	461F0800	4
WASHER SPRING 8MM (Ref # 2)	461F0800	4
WASHER PLAIN 8MM (Ref # 3)	410B0800	4
DAMPER RUBBER (Ref # 4)	92075-074	8
CYLINDER HEAD (Ref # 5)	11001-085	1
GASKET CYLINDER HEAD (Ref # 6)	11004-015	1
CYLINDER,BLACK (Ref # 7)	11005-1031	1
CYLINDER,BLACK (Ref # 7)	11005-1031	1
GASKET,CYLINDER BASE (Ref # 8)	11060-1200	1
DAMPER RUBBER-CYLNDER (Ref # 9)	92075-142	4
GASKET,EXHAUST PIPE H (Ref # 10)	11009-1866	1
INSERT-EXHAUST HOLDER (Ref # 11)	18070-005	1
HOLDER,EX PIPE,BLACK (Ref # 12)	18069-035-21	1
HOLDER,EX PIPE,BLACK (Ref # 12)	18069-035-21	1
WASHER SPRING 6MM (Ref # 13)	461F0600	2
BOLT-UPSET,6X35 (Ref # 14)	112G0635	2

© 2026 Kawasaki Motors Corp., U.S.A.