1979 KX80

PARTS DIAGRAM

REAR HUB/BRAKE/CHAIN

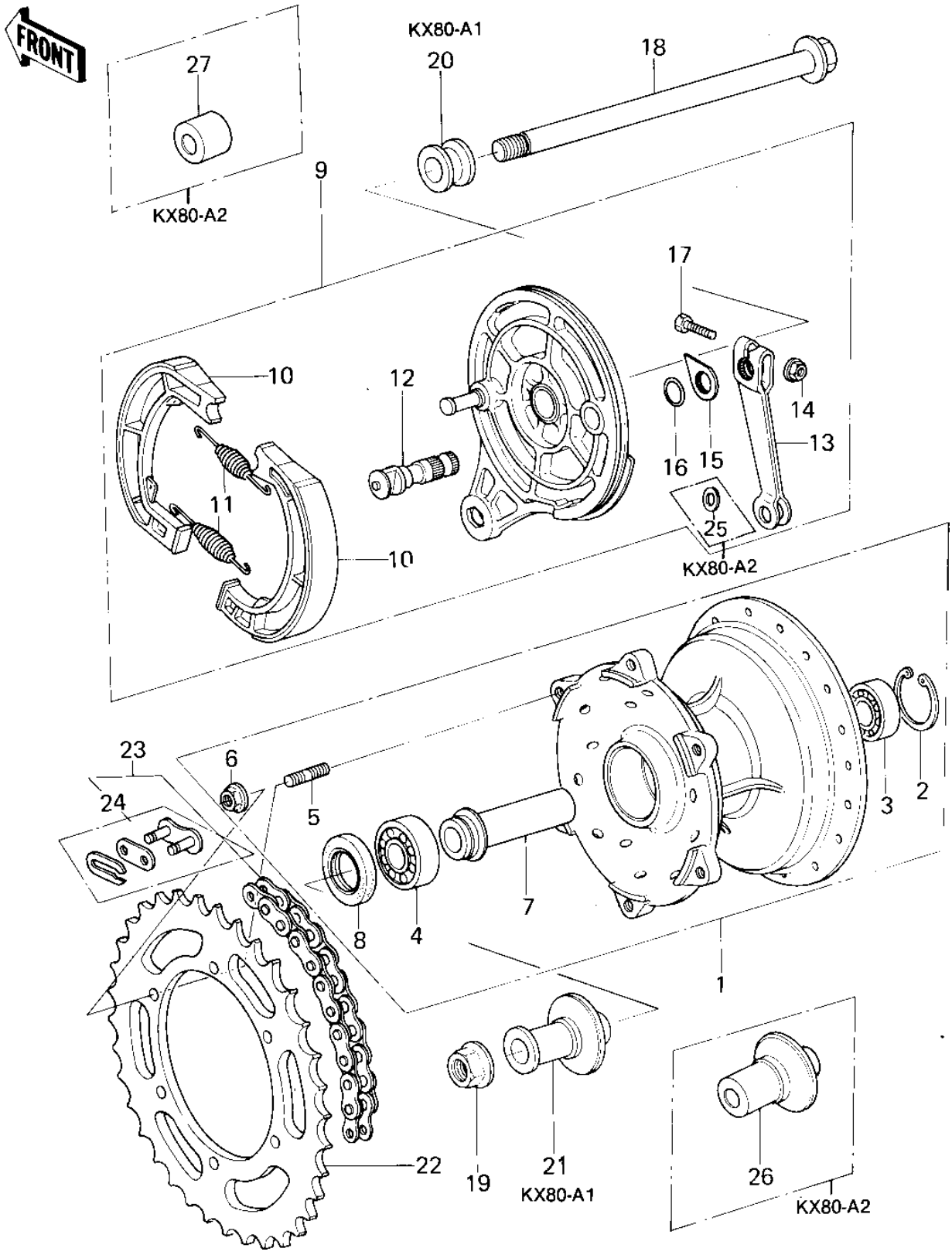

© 2026 Kawasaki Motors Corp., U.S.A.

1979 KX80

PARTS LIST

REAR HUB/BRAKE/CHAIN

ITEM NAME	PART NUMBER	QUANTITY
DRUM-ASSY,REAR BRAKE (Ref # 1)	41034-5003	1
DRUM-ASSY,REAR BRAKE (Ref # 1)	41034-5003	1
CIRCLIP,32MM (Ref # 2)	481J3200	1
BEARING,BALL (Ref # 3)	601B6201U	1
BEARING BALL #6203 (Ref # 4)	601B6203	1
STUD,8X15 (Ref # 5)	92004-1014	6
STUD,8X17 (Ref # 5)	92004-1015	6
NUT-8MM (Ref # 6)	92015-1022	6
COLLAR,REAR BRAKE DRM (Ref # 7)	92027-1089	1
OIL SEAL,24X40X8 (Ref # 8)	92049-1012	1
PANEL-ASY,RR BRK (Ref # 9)	41035-1032	1
PANEL-ASY,RR BRK (Ref # 9)	41035-1032	1
SHOE,BRAKE (Ref # 10)	41048-1021	2
SPRING,BRAKE SHOE (Ref # 11)	92081-1766	2
CAM,BRAKE,REAR (Ref # 12)	41050-1012	1
LEVER,BRAKE CAM,REAR (Ref # 13)	41053-1010	1
NUT,6MM (Ref # 14)	41072-007	1
INDICATOR,BRAKE SHOE (Ref # 15)	41085-1002	1
"O" RING,12MM (Ref # 16)	670B2012	1
BOLT,HEX HEAD,6X30 (Ref # 17)	92001-1135	1
AXLE,REAR (Ref # 18)	41068-1037	1
AXLE,REAR,12X211 (Ref # 18)	41068-1036	1
NUT-12MM (Ref # 19)	92015-1156	1
COLLAR,REAR AXLE,R.H. (Ref # 20)	92027-1090	1
COLLAR,REAR AXLE,L.H. (Ref # 21)	92027-1091	1
REAR SPROCKET,48T (Ref # 22)	42041-1016	1
REAR SPROCKET,50T (Ref # 22)	42041-1034	(1
REAR SPROCKET,52T (Ref # 22)	42041-1035	(1
CHAIN ASSY,EK420SHG (Ref # 23)	92057-1093	1

© 2026 Kawasaki Motors Corp., U.S.A.

1979 KX80

PARTS LIST

REAR HUB/BRAKE/CHAIN

ITEM NAME	PART NUMBER	QUANTITY
CHAIN ASSY,EK420SHG (Ref # 23)	92057-1097	1
JOINT,CHAIN (Ref # 24)	92058-1016	1
WASHER (Ref # 25)	92022-257	1
COLLAR,REAR BRAKE DRM (Ref # 26)	92027-1246	1
COLLAR,REAR AXLE (Ref # 27)	92027-1247	1

© 2026 Kawasaki Motors Corp., U.S.A.