1979 KX80

PARTS DIAGRAM

FRONT HUB/BRAKE

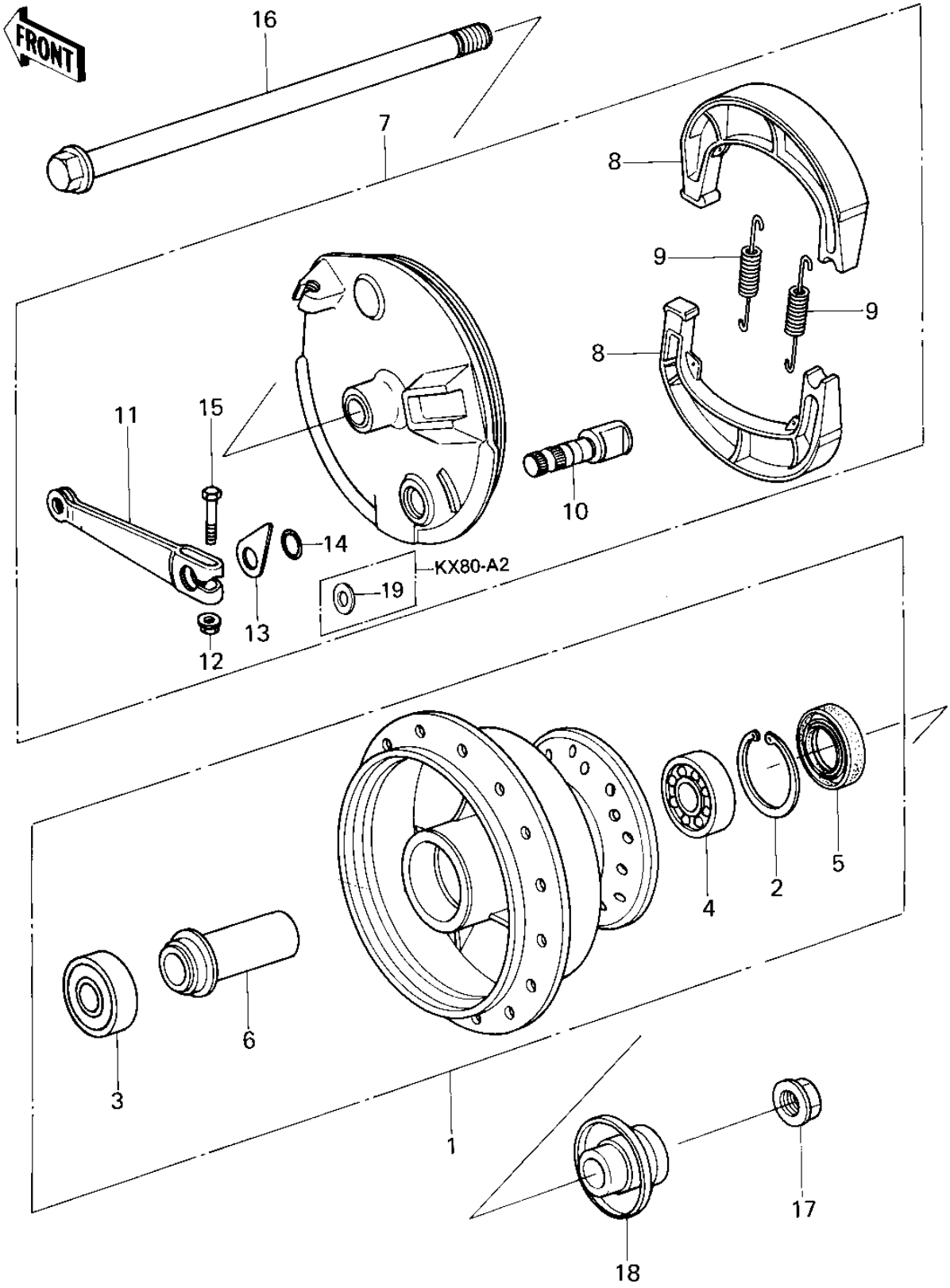

© 2026 Kawasaki Motors Corp., U.S.A.

1979 KX80

PARTS LIST

FRONT HUB/BRAKE

ITEM NAME	PART NUMBER	QUANTITY
DRUM-ASSY,FR BRK (Ref # 1)	41034-1013	1
CIRCLIP,35MM (Ref # 2)	481J3500	1
BEARING,BALL,#6200U (Ref # 3)	601B6200U	1
BEARING,BALL,#6300 (Ref # 4)	601B6300	1
OIL SEAL,20X35X7 (Ref # 5)	654A203507	1
COLLAR,FRONT BRAKE (Ref # 6)	92027-1093	1
PANEL-ASY,FR BRK (Ref # 7)	41035-1037	1
PANEL-ASY,FR BRK (Ref # 7)	41035-1037	1
SHOE,BRAKE (Ref # 8)	41048-1021	2
SPRING,BRAKE SHOE (Ref # 9)	92081-1766	2
CAM,BRAKE,FRONT (Ref # 10)	41050-1009	1
LEVER,BRAKE CAM,FRONT (Ref # 11)	41053-1011	1
NUT,6MM (Ref # 12)	41072-007	1
INDICATOR,BRAKE SHOE (Ref # 13)	41085-1002	1
"O" RING,12MM (Ref # 14)	670B2012	1
BOLT,HEX HEAD,6X30 (Ref # 15)	92001-1135	1
AXLE,FRONT (Ref # 16)	41068-1011	1
NUT,10MM (Ref # 17)	92015-1415	1
NUT,10MM (Ref # 17)	92015-1415	1
COLLAR,FRONT AXLE (Ref # 18)	92027-1094	1
WASHER (Ref # 19)	92022-257	1

© 2026 Kawasaki Motors Corp., U.S.A.