1979 KX80

PARTS DIAGRAM

GEAR CHANGE MECHANISM

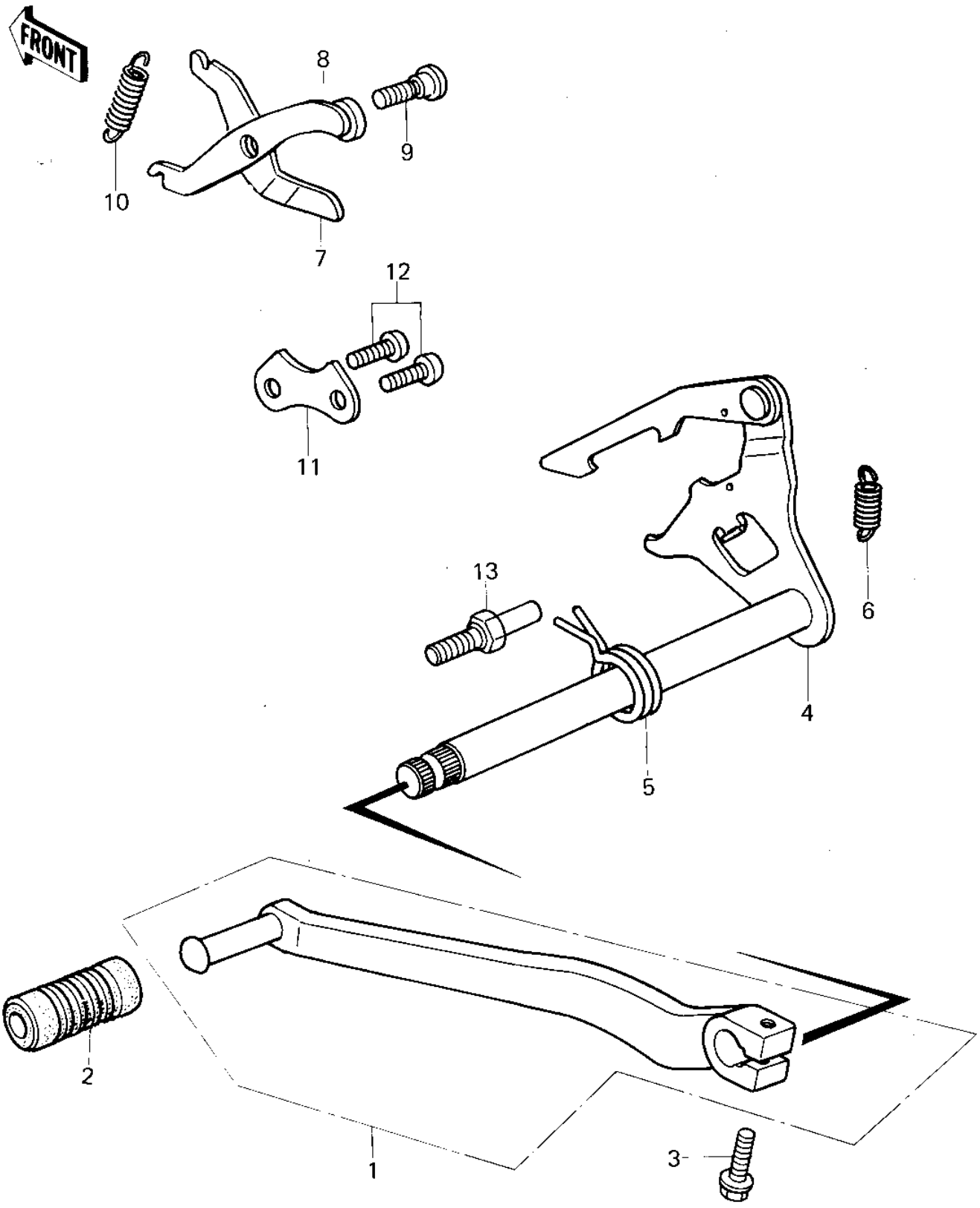

© 2026 Kawasaki Motors Corp., U.S.A.

1979 KX80

PARTS LIST

GEAR CHANGE MECHANISM

ITEM NAME	PART NUMBER	QUANTITY
PEDAL ASSY,GEAR CHANG (Ref # 1)	13156-1018	1
DAMPER,CHANGE PEDAL (Ref # 2)	92160-1108	1
BOLT,FLANGED,6X22 (Ref # 3)	92001-1352	1
LEVER ASSY,GEAR CHANG (Ref # 4)	13161-1010	1
SPRING,TENTION (Ref # 5)	92081-1129	1
SPRING,GEAR CHANGE (Ref # 6)	92081-156	1
LEVER,GEAR SET (Ref # 7)	13168-1038	1
LEVER,NEUTRAL (Ref # 8)	13236-1009	1
SCREW-PAN HEAD (Ref # 9)	92011-023	1
SPRING,CHANGE LEVER (Ref # 10)	92081-1109	1
PLATE,CHANGE DRUM (Ref # 11)	13169-1132	1
SCREW PAN HEAD 6X14 (Ref # 12)	220B0614	2
BOLT,RETURN SPRING (Ref # 13)	92001-1401	1

© 2026 Kawasaki Motors Corp., U.S.A.