1974 MT1B

PARTS DIAGRAM

CLUTCH ('71-'75)

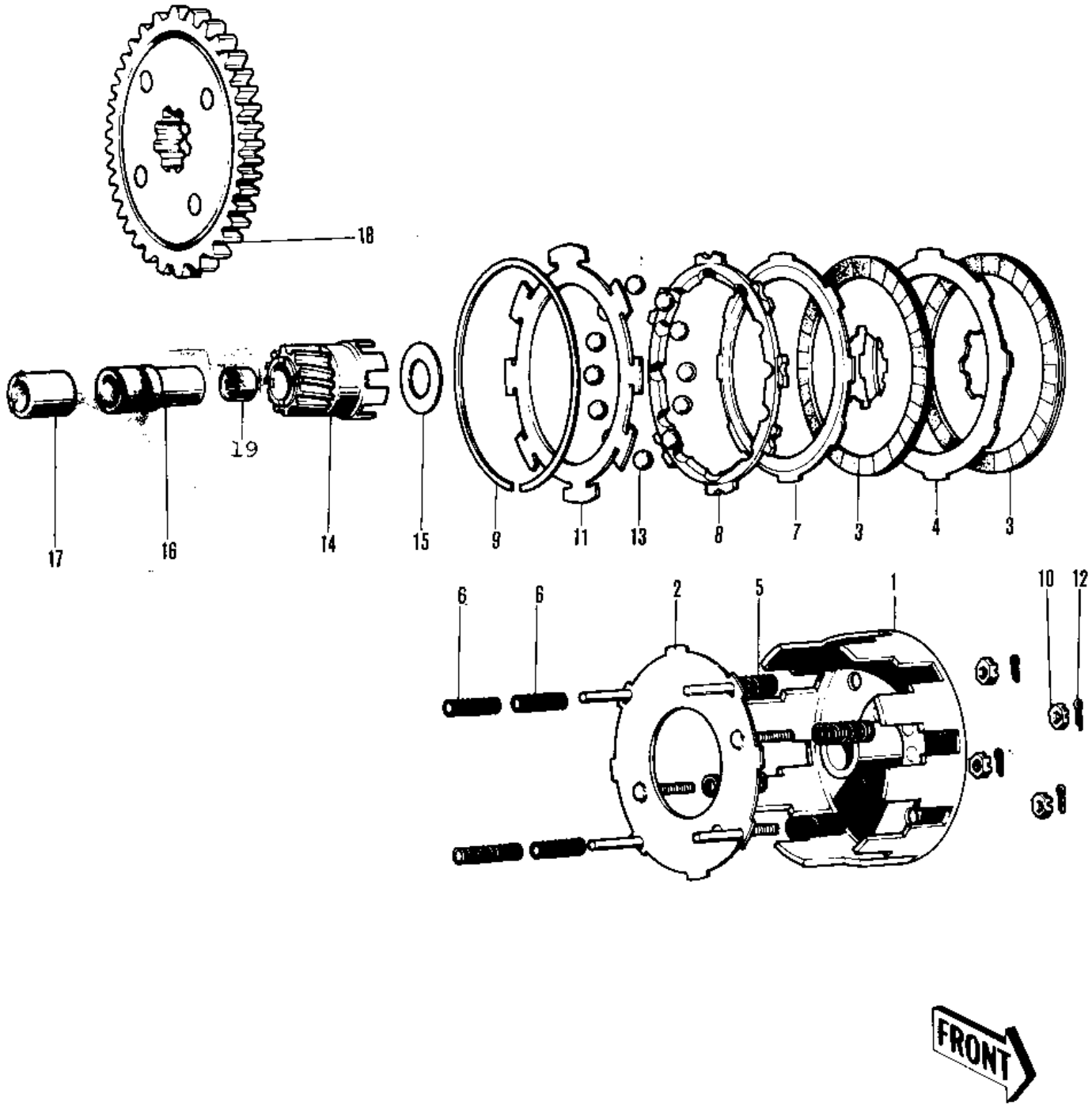

© 2026 Kawasaki Motors Corp., U.S.A.

1974 MT1B

PARTS LIST

CLUTCH ('71-'75)

ITEM NAME	PART NUMBER	QUANTITY
CLUTCH-ASSY (Ref # 1 13)	13081-036	
HOUSING-CLUTCH (Ref # 1)	13095-028	
WHEEL-CLUTCH (Ref # 2)	13083-006	
PLATE-CLUTCH FRICTION (Ref # 3)	13088-024	
PLATE-CLUTCH STEEL (Ref # 4)	13179-003	
SPRING-CLUTCH (Ref # 5)	92081-086	
SPRING-RETURN (Ref # 6)	92081-087	
PLATE-BALL HOLDER (Ref # 7)	13189-003	
PLATE-BALL GUIDE (Ref # 8)	13190-003	
CIRCLIP (Ref # 9)	13191-003	
NUT,6MM (Ref # 10)	13195-003	
PLATE-BALL HOLDER (Ref # 11)	13198-003	
PIN COTTER 1.6X15 (Ref # 12)	550D1615	
BALL STEEL 3/8' (Ref # 13)	600A1200	
HUB-CLUTCH (Ref # 14,19)	13084-003	
WASHER (Ref # 15)	92022-142	
BUSH-CLUTCH (Ref # 16)	13215-005	
COLLAR (Ref # 17)	92027-125	
GEAR ASSY-CLUTCH (Ref # 18)	13216-004	
BEARING,N RC121610 (Ref # 19)	92117-001	

© 2026 Kawasaki Motors Corp., U.S.A.