1971 Mini-Trail

PARTS DIAGRAM

CYLINDER HEAD/CYLINDER ('71-'75)

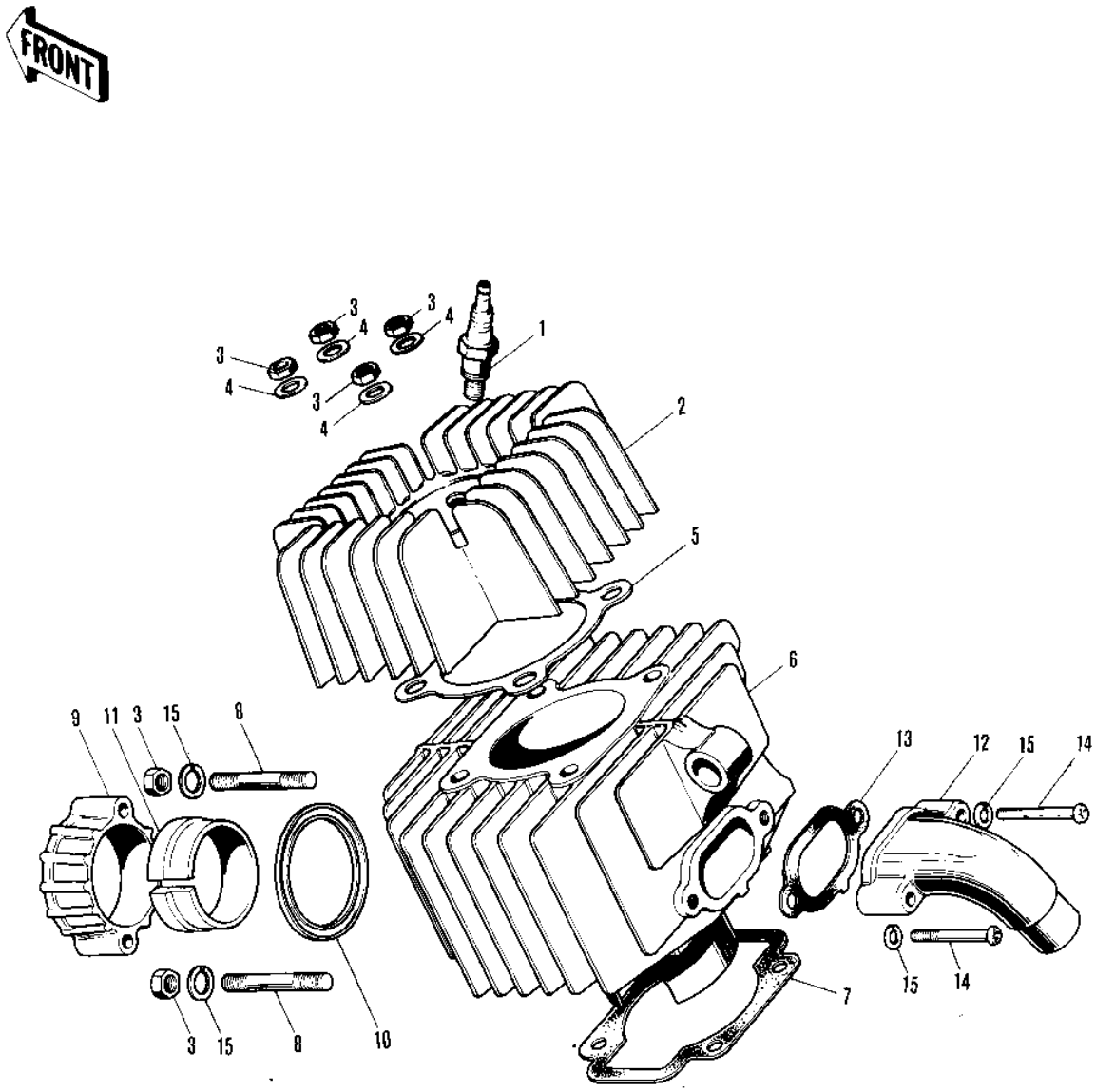

© 2026 Kawasaki Motors Corp., U.S.A.

1971 Mini-Trail

PARTS LIST

CYLINDER HEAD/CYLINDER ('71-'75)

ITEM NAME	PART NUMBER	QUANTITY
SPARK PLUG B7HS (Ref # 1)	B7HS	1
CYLINDER HEAD (Ref # 2)	11001-014	1
NUT 6MM (Ref # 3)	311B0600	6
WASHER PLAIN 6MM (Ref # 4)	411B0600	4
GASKET-CYLINDER HEAD (Ref # 5)	11004-014	1
CYLINDER (Ref # 6)	11005-078	1
GASKET-CYCLINDER BASE (Ref # 7)	11009-008	1
STUD,6X30 (Ref # 8)	172G0630	2
HOLDER,EX PIPE,BLACK (Ref # 9)	18069-035-21	1
GASKET,EXHAUST PIPE H (Ref # 10)	11009-1866	1
INSERT-EXHAUST HOLDER (Ref # 11)	18070-005	1
INLET PIPE (Ref # 12)	11015-023	1
GASKET-INLET PIPE (Ref # 13)	11017-003	1
SCREW PAN HEAD 6X25 (Ref # 14)	220B0625	2
WASHER SPRING 6MM (Ref # 15)	461F0600	4

© 2026 Kawasaki Motors Corp., U.S.A.