1987 JS550

PARTS DIAGRAM

HANDLE POLE

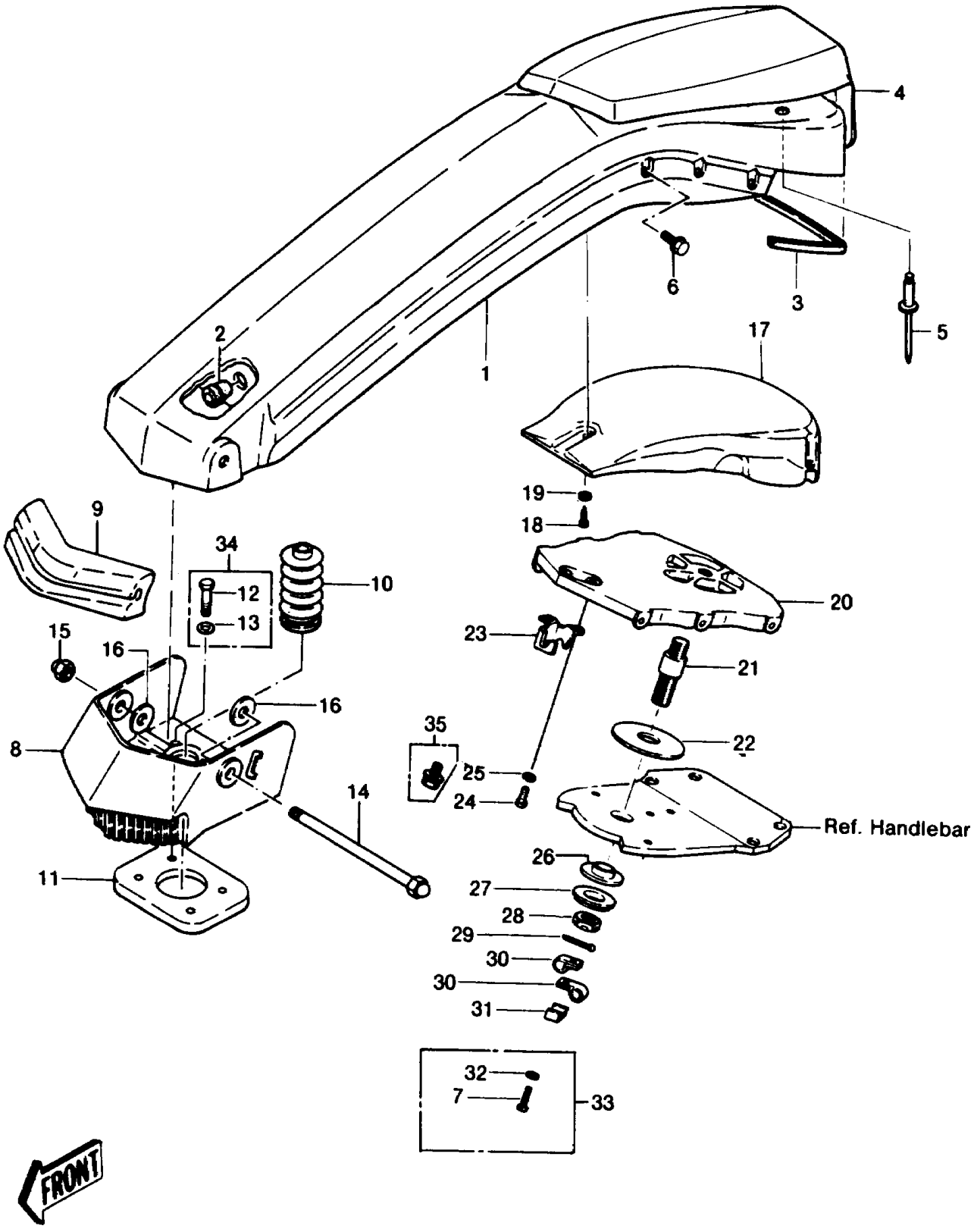

© 2026 Kawasaki Motors Corp., U.S.A.

1987 JS550

PARTS LIST

HANDLE POLE

ITEM NAME	PART NUMBER	QUANTITY
CAP. (Ref # 10)	59176-514	1
BRACKET,PLATE,HANDLE (Ref # 11)	59086-538	1
BOLT,8X30 (Ref # 12)	92001-3702	4
WASHER-PLAIN,8MM (Ref # 13)	411S0800	4
BOLT,14X183 (Ref # 14)	92001-3018	1
NUT,14MM (Ref # 15)	92015-507	1
WASHER,15X36X4.5 (Ref # 16)	92022-3024	2
FLOAT (Ref # 17)	16031-506	1
SCREW (Ref # 18)	92011-562	3
WASHER (Ref # 19)	92022-563	3
BRACKET,SUPPORT (Ref # 20)	11034-3010	1
STUD (Ref # 21)	92004-3701	1
BUSHING (Ref # 22)	92028-512	1
HOLDER-CABLE (Ref # 23)	14044-3001	1
BOLT,6X12 (Ref # 24)	110R0612	2
WASHER-SPRING,6MM (Ref # 25)	461S0600	2
BUSHING (Ref # 26)	92028-513	1
WASHER (Ref # 27)	92022-571	1
NUT,CASTLE,18MM (Ref # 28)	92015-3006	1
PIN-COTTER,4X40 (Ref # 29)	550S4040	1
CLAMP,LEAD WIRE (Ref # 30)	92037-3007	2
WASHER,CLAMP (Ref # 31)	92022-3014	1
WASHER-SPRING,5MM (Ref # 32)	461S0500	1
POLE-HANDLE,JET WHITE (Ref # 1)	59166-3002-8C	1
GROMMET (Ref # 2)	92071-530	1
GROMMET (Ref # 3)	92071-534	1
PAD-HANDLE,POLE (Ref # 4)	39087-3701	1
RIVET (Ref # 5)	92039-3712	6
BOLT,6X16 (Ref # 6)	92002-3728	6

© 2026 Kawasaki Motors Corp., U.S.A.

1987 JS550

PARTS LIST

HANDLE POLE

ITEM NAME	PART NUMBER	QUANTITY
SCREW-PAN-CROS (Ref # 7)	220R0516	1
BRACKET-HANDLE POLE,JET WHITE (Ref # 8)	39021-3701-8C	1
DAMPER (Ref # 9)	92075-519	1

© 2026 Kawasaki Motors Corp., U.S.A.