1987 JS550

PARTS DIAGRAM

CRANKCASE

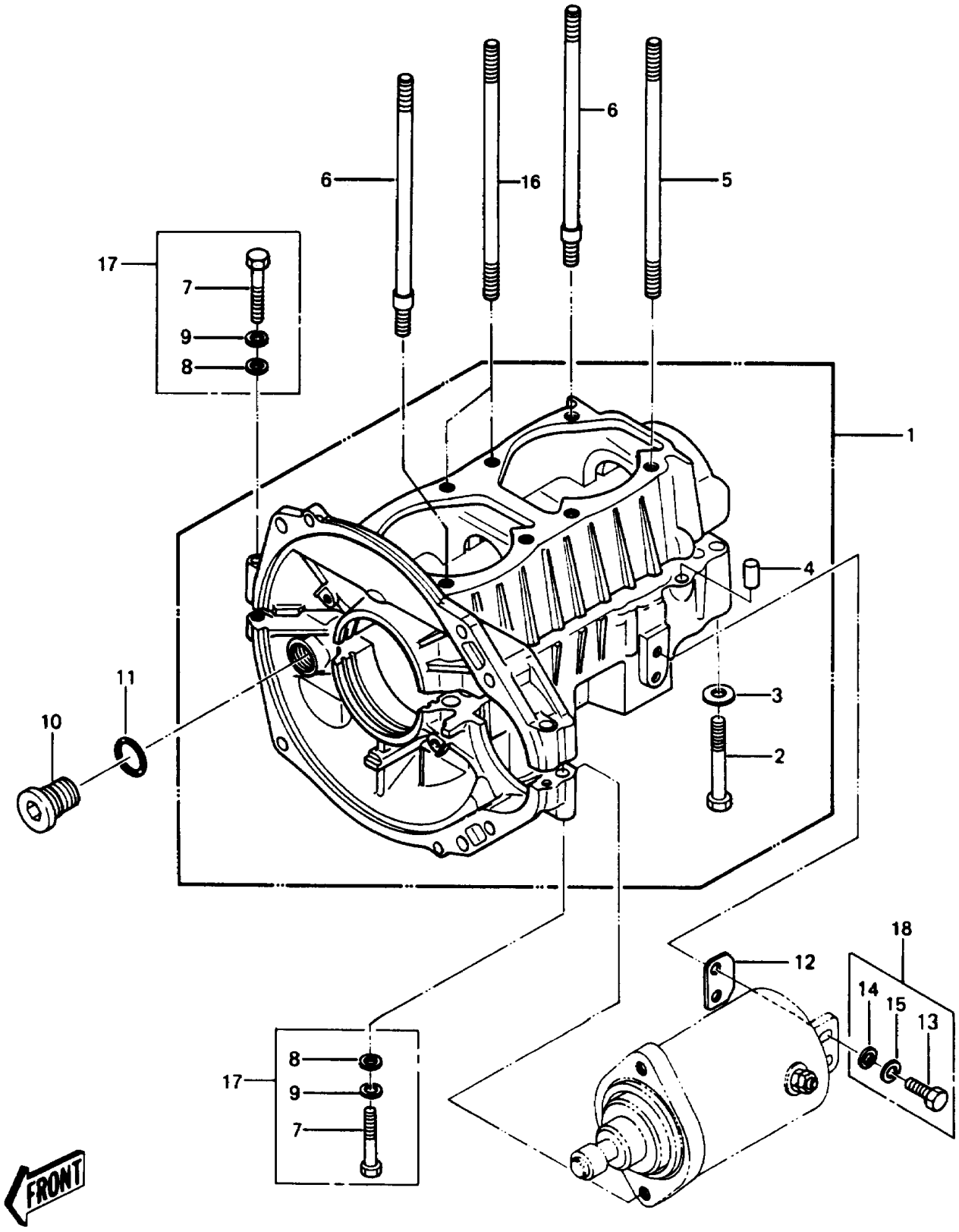

© 2026 Kawasaki Motors Corp., U.S.A.

1987 JS550

PARTS LIST

CRANKCASE

ITEM NAME	PART NUMBER	QUANTITY
JOINT (Ref # 10)	59071-516	1
O RING,16MM (Ref # 11)	670B2016	1
SHIM,STARTER,T=0.6 (Ref # 12A)	92025-3013	AR
SHIM,STARTER,T=0.8 (Ref # 12B)	92025-3014	AR
SHIM,STARTER,T=0.4 (Ref # 12)	92025-3012	AR
BOLT,6X20 (Ref # 13)	110R0620	2
WASHER-PLAIN-SMALL,6MM (Ref # 14)	410S0600	2
WASHER-SPRING,6MM (Ref # 15)	461S0600	2
STUD,8X170 (Ref # 16)	92004-2084	2
SET-CRANKCASE (Ref # 1)	14001-3027-YR	1
BOLT,8X60 (Ref # 2)	92001-3033	10
WASHER-PLAIN-SMALL,8MM (Ref # 3)	410S0800	10
PIN,DOWEL,6.3X8X14 (Ref # 4)	92042-007	2
STUD,8X167 (Ref # 5)	92004-507	4
STUD,8X167 (Ref # 6)	92004-3020	2
BOLT,6X40 (Ref # 7)	110R0640	3
WASHER-PLAIN-SMALL,6MM (Ref # 8)	410S0600	3
WASHER-SPRING,6MM (Ref # 9)	461S0600	3

© 2026 Kawasaki Motors Corp., U.S.A.