1988 JS300

PARTS DIAGRAM

Oil Pump

Kawasaki
Let the Good Times Roll®

E1710-0075

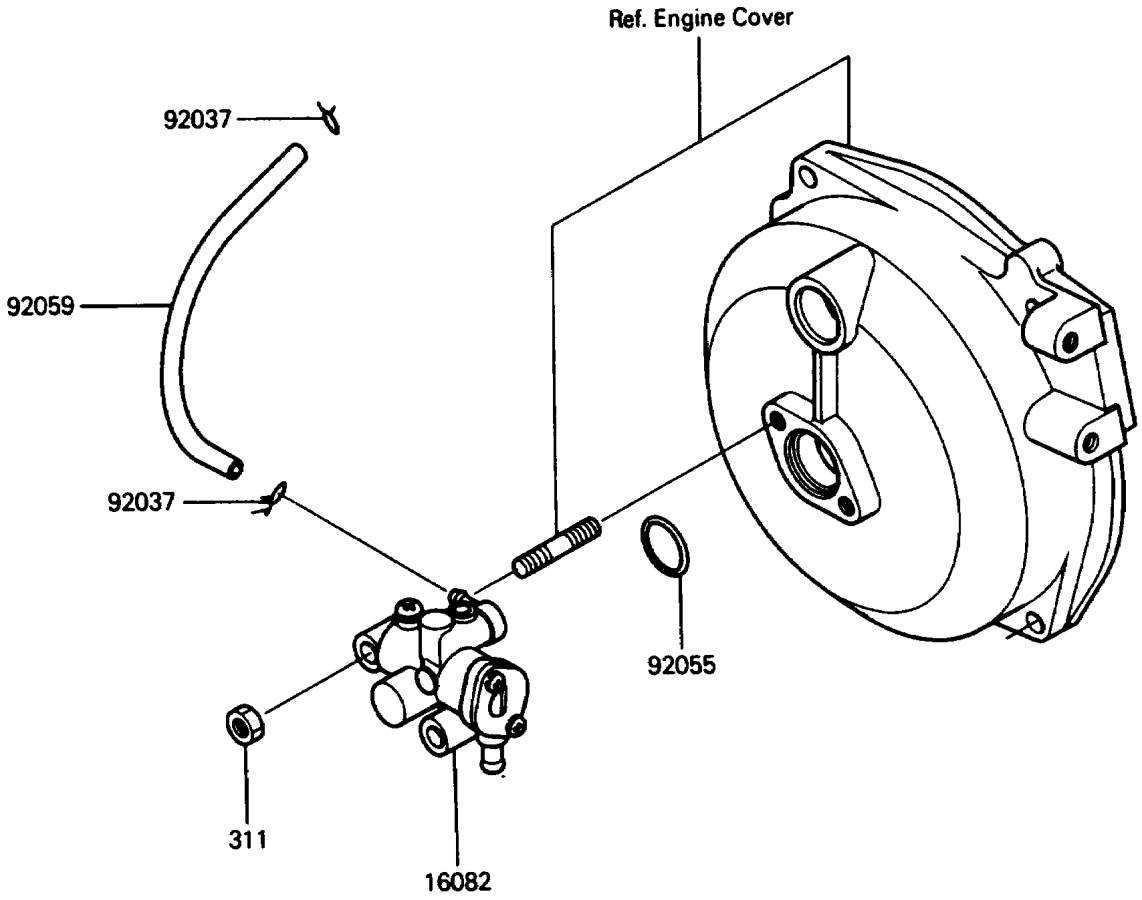

© 2026 Kawasaki Motors Corp., U.S.A.

1988 JS300

PARTS LIST

Oil Pump

ITEM NAME	PART NUMBER	QUANTITY
PUMP-ASSY-OIL (Ref # 16082)	16082-3707	1
CLAMP (Ref # 92037)	92037-3722	2
RING-O,19.5X1.5 (Ref # 92055)	92055-055	1
TUBE,3X6X170 (Ref # 92059)	92059-3716	1
NUT-HEX,6MM (Ref # 311)	311R0600	2

© 2026 Kawasaki Motors Corp., U.S.A.