1995 SC

PARTS DIAGRAM

Crankshaft/Piston(s)

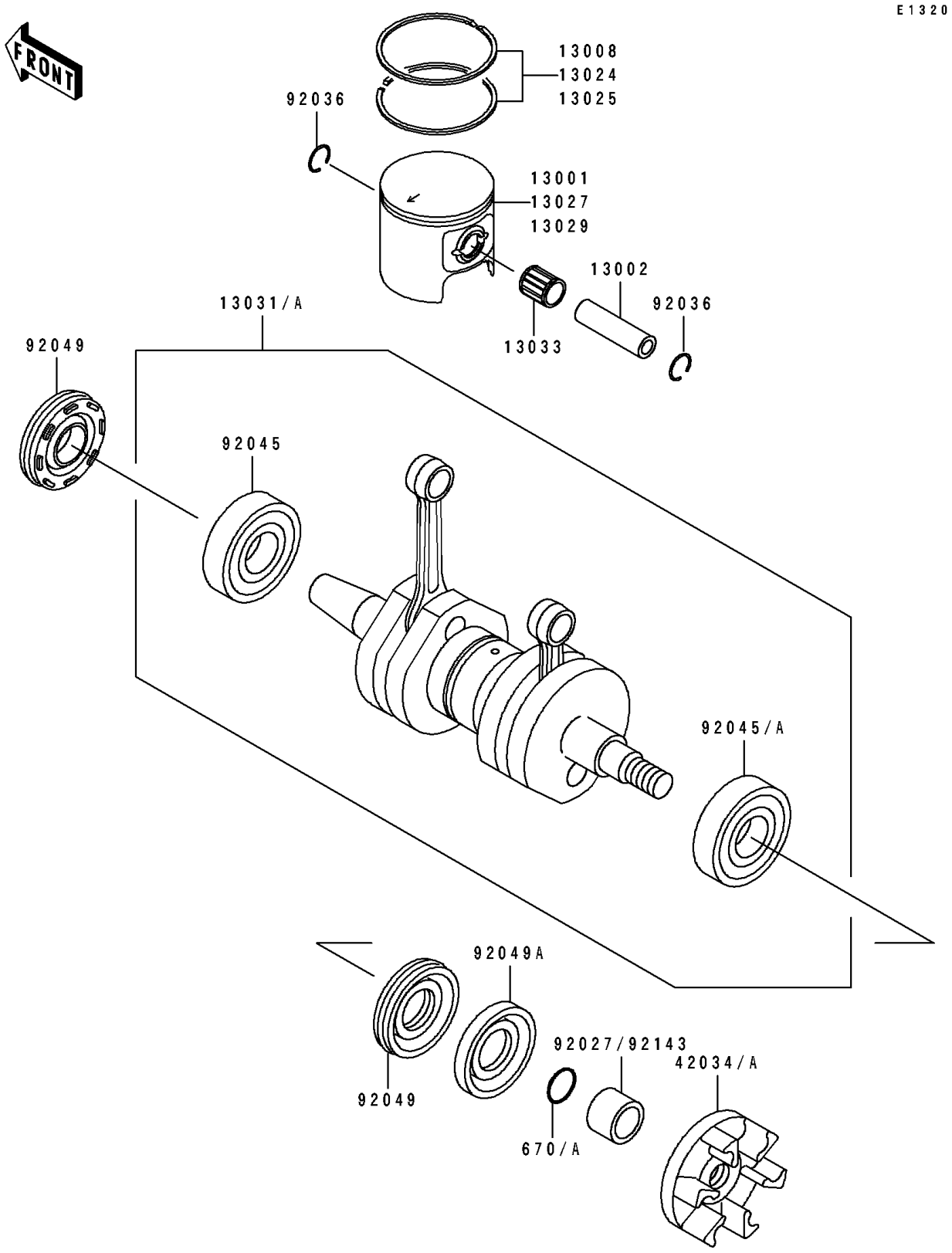

© 2026 Kawasaki Motors Corp., U.S.A.

1995 SC

PARTS LIST

Crankshaft/Piston(s)

ITEM NAME	PART NUMBER	QUANTITY
PISTON-ENGINE (Ref # 13001)	13001-3714	2
PIN-PISTON (Ref # 13002)	13002-017	2
RING-SET-PISTON,STD (Ref # 13008)	13008-3701	2
RING-SET-PISTON LL,O/S,1.00 (Ref # 13024)	13024-3701	2
RING-SET-PISTON L,O/S,0.50 (Ref # 13025)	13025-3701	2
PISTON-ENGINE LL,O/S 1.00 (Ref # 13027)	13027-3709	2
PISTON-ENGINE L,O/S 0.50 (Ref # 13029)	13029-3709	2
CRANKSHAFT-COMP (Ref # 13031A)	13031-3723	1
BEARING-NEEDLE,KBK18X22X23.8X (Ref # 13033)	13033-1010	2
COUPLING (Ref # 42034A)	42034-3707	1
RING-SNAP,PISTON PIN (Ref # 92036)	92036-015	4
BEARING-BALL,6303C4 (Ref # 92045)	92045-3709	2
BEARING-BALL (Ref # 92045A)	92045-3714	1
SEAL-OIL,FWJ15307210 (Ref # 92049)	92049-3705	2
SEAL-OIL,S30726 (Ref # 92049A)	92049-3706	1
COLLAR,21X30X22 (Ref # 92143)	92143-3735	1
O RING,16MM (Ref # 670A)	670B2016	1

© 2026 Kawasaki Motors Corp., U.S.A.