1984 KD80

PARTS DIAGRAM

OIL TANK

F2450-0009

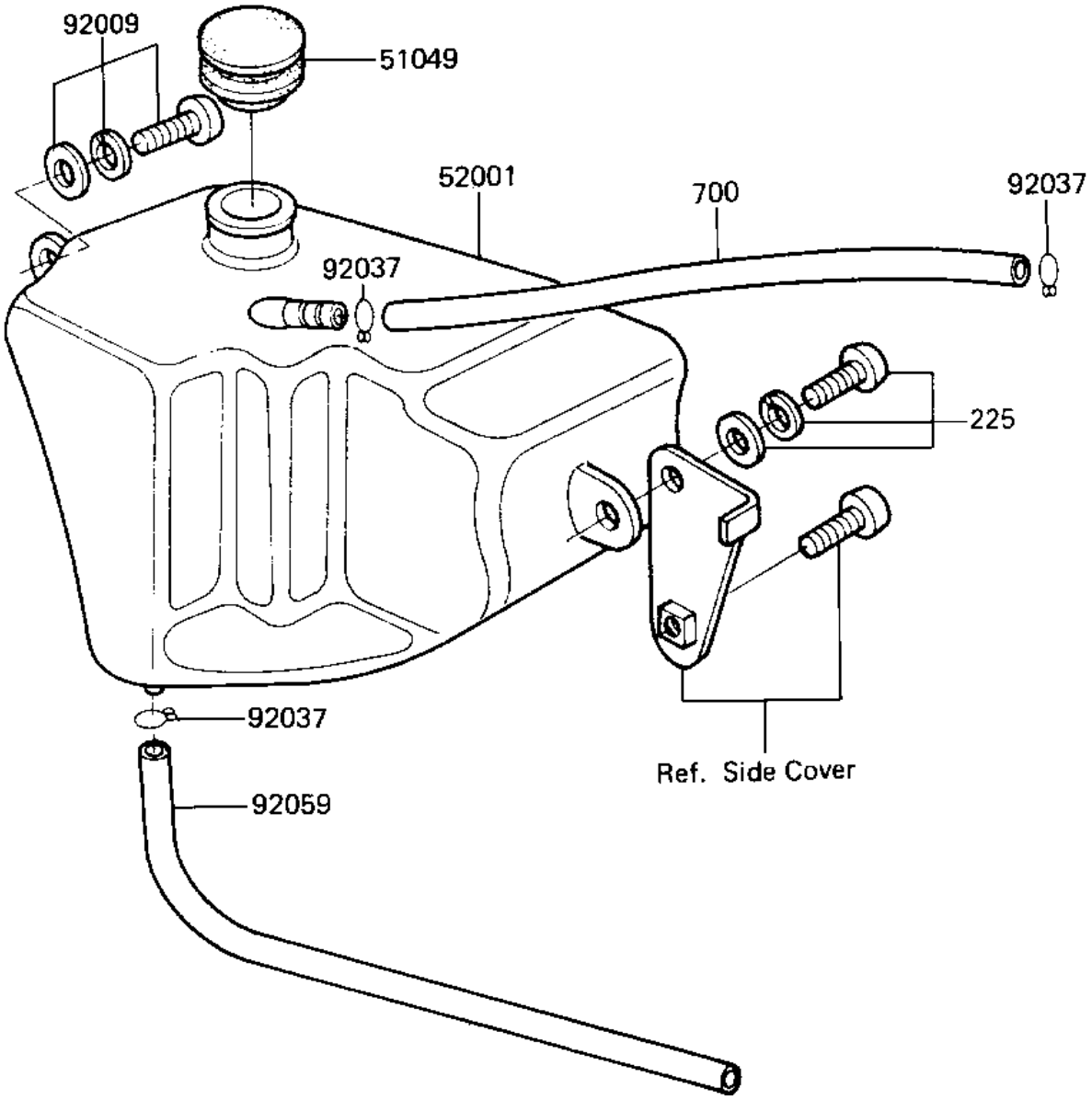

© 2026 Kawasaki Motors Corp., U.S.A.

1984 KD80

PARTS LIST

OIL TANK

ITEM NAME	PART NUMBER	QUANTITY

© 2026 Kawasaki Motors Corp., U.S.A.