1984 KD80

PARTS DIAGRAM

REAR HUB/BRAKE/CHAIN

Kawasaki
Let the Good Times Roll®

F2240-0048

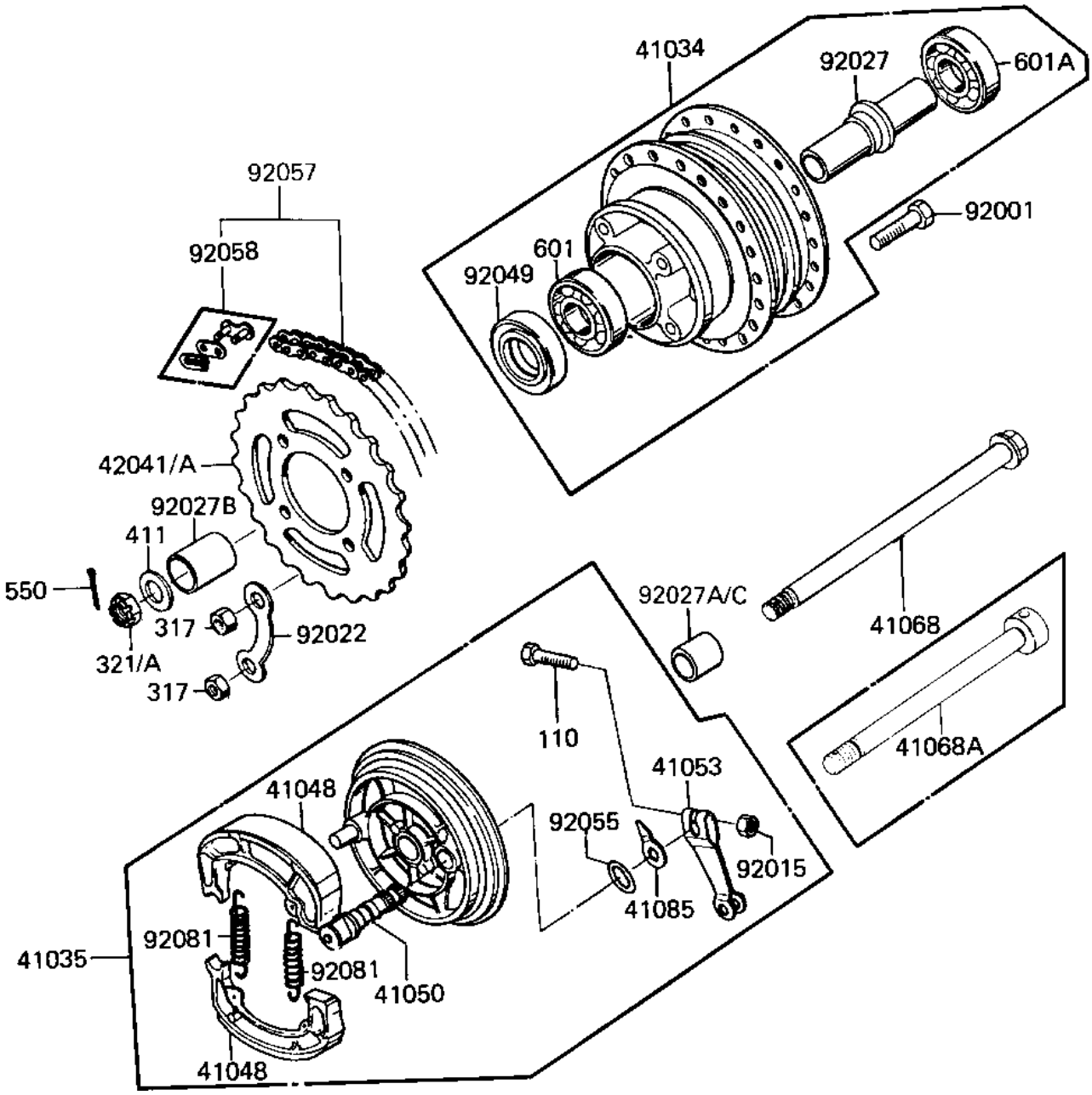

© 2026 Kawasaki Motors Corp., U.S.A.

1984 KD80

PARTS LIST

REAR HUB/BRAKE/CHAIN

Kawasaki
Let the Good Times Roll®

ITEM NAME	PART NUMBER	QUANTITY
DRUM-ASSY,RR BRK,BUFF (Ref # 41034)	41034-1002-80	1
PANEL-ASY,RR BRK,BUFF (Ref # 41035)	42006-063-80	1
SHOE-BRAKE (Ref # 41048)	41048-1085	2
CAM SHAFT,REAR BRAKE (Ref # 41050)	42026-018	1
LEVER,REAR BRAKE PANL (Ref # 41053)	42029-027	1
AXLE,12X206 (Ref # 41068A)	41068-1091	1
INDICATOR,BKSHOE (Ref # 41085)	41085-003	1
REAR SPROCKET 37T (Ref # 42041)	42041-020	1
REAR SPROCKET 39T (Ref # 42041A)	42041-045	1
BOLT REAR SPROCKET (Ref # 92001)	92001-021	4
NUT,6MM (Ref # 92015)	41072-007	1
WASHER RR SPRCKT LOCK (Ref # 92022)	92088-003	2
SPACER RR HUB BEARING (Ref # 92027)	42010-003	1
COLLAR,REAR AXLE (Ref # 92027B)	42032-044	1
COLLAR,12.2X22X30.5 (Ref # 92027C)	92027-1478	1
OIL SEAL RR BRK DRUM (Ref # 92049)	92052-001	1
"0" RING,11MM (Ref # 92055)	92055-004	1
CHAIN,DRIVE,EK428 98L (Ref # 92057)	92057-1092	1
JOINT-CHAIN (Ref # 92058)	92058-1014	1
SPRING,BRAKE SHOE (Ref # 92081)	92081-1766	2
BOLT-UPSET (Ref # 110)	112G0630	1
NUT,8M/M (Ref # 317)	317B0800	4
NUT CASTLE 12MM (Ref # 321)	321B1200	1
WASHER PLAIN 12MM (Ref # 411)	411B1200	1
PIN COTTER 3.0X25 (Ref # 550)	550D3025	1
BEARING BALL #6301 (Ref # 601)	601B6301	1
BEARING BALL #6301 (Ref # 601A)	601B6301Z	1

© 2026 Kawasaki Motors Corp., U.S.A.