1984 KD80

PARTS DIAGRAM

OIL PUMP

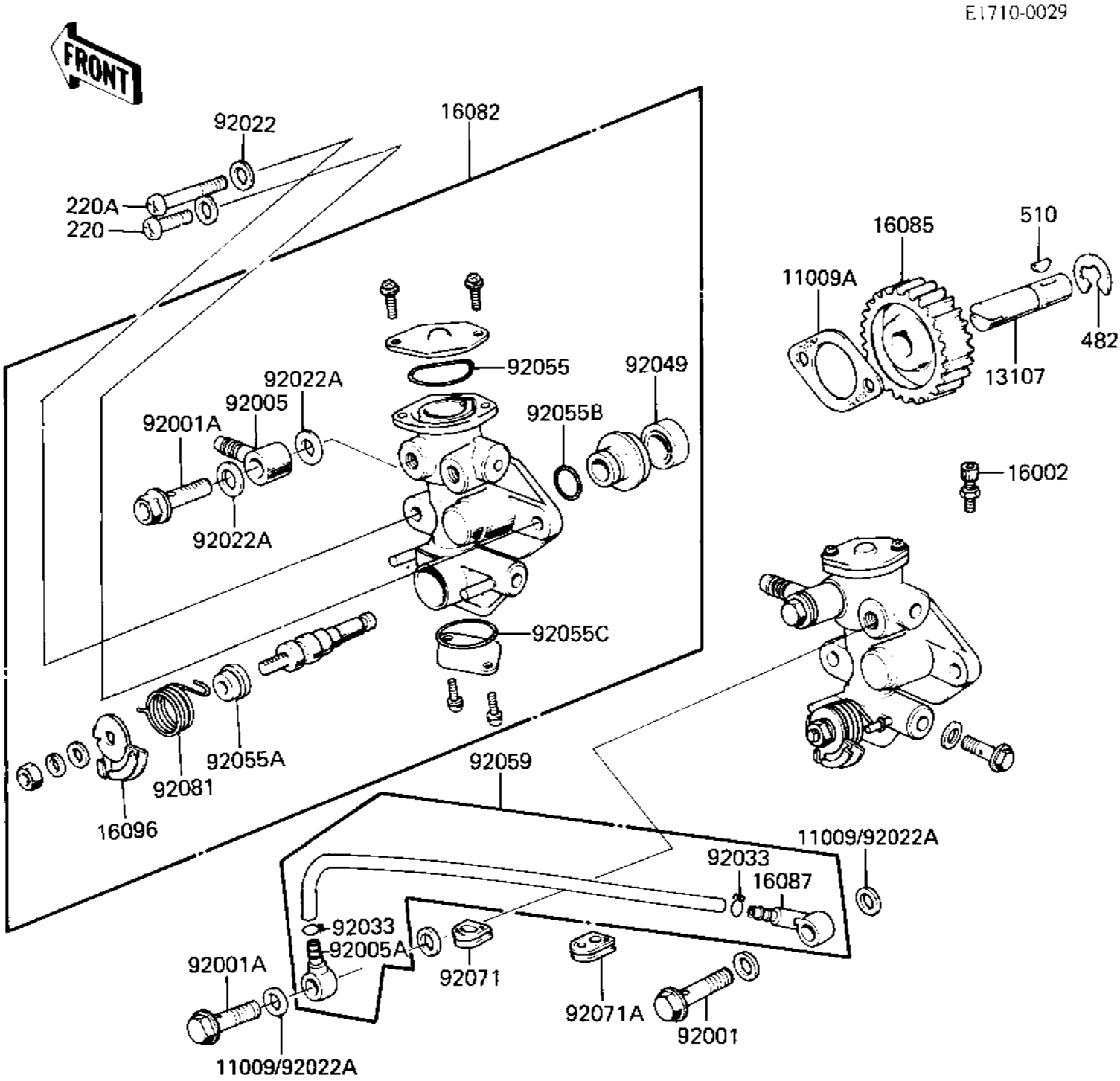

© 2026 Kawasaki Motors Corp., U.S.A.

1984 KD80

PARTS LIST

OIL PUMP

ITEM NAME	PART NUMBER	QUANTITY

© 2026 Kawasaki Motors Corp., U.S.A.