1984 KD80

PARTS DIAGRAM

CRANKCASE

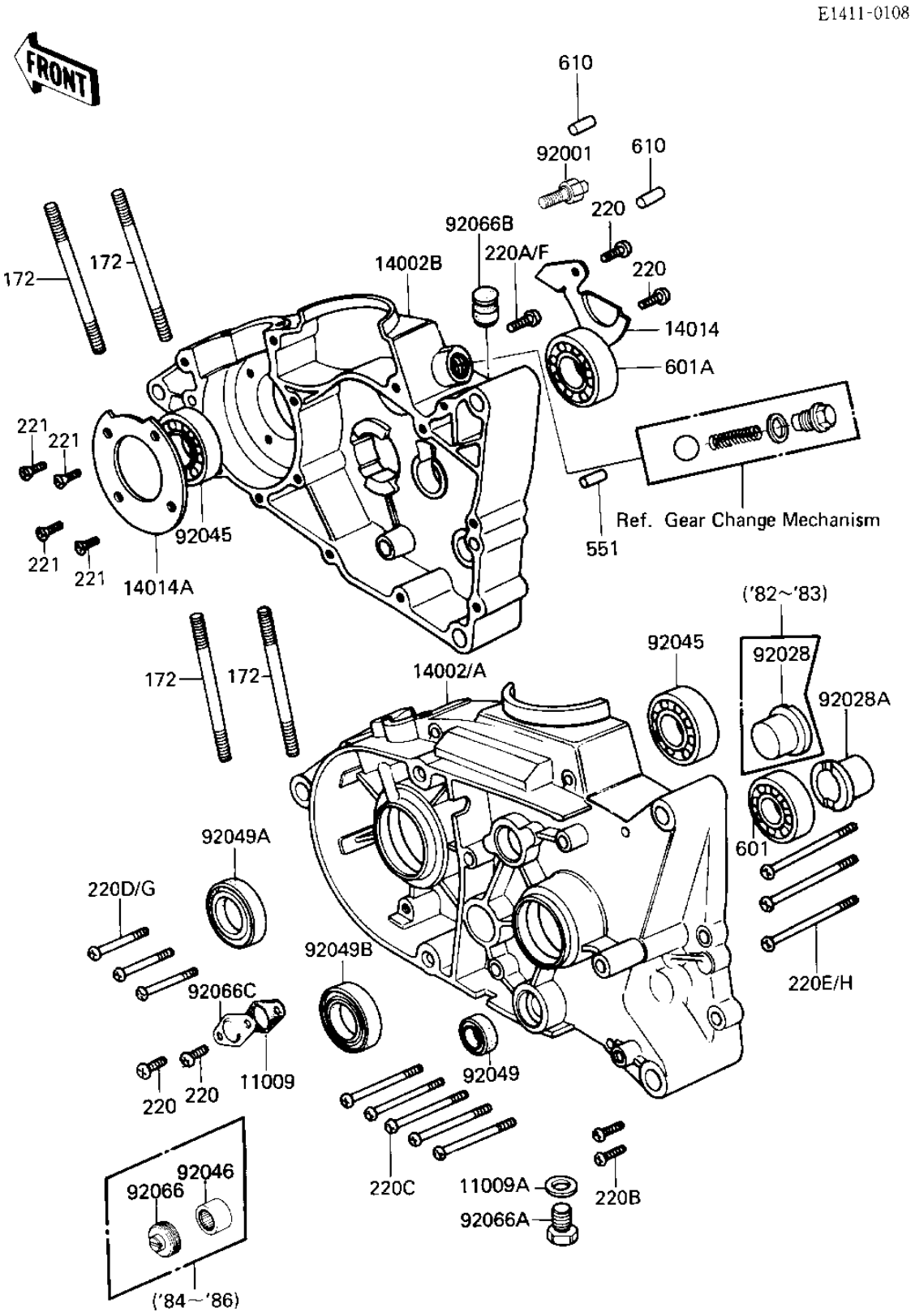

© 2026 Kawasaki Motors Corp., U.S.A.

1984 KD80

PARTS LIST

CRANKCASE

ITEM NAME	PART NUMBER	QUANTITY

© 2026 Kawasaki Motors Corp., U.S.A.