1984 KD80

PARTS DIAGRAM

CRANKSHAFT/PISTON/ROTARY VALVE

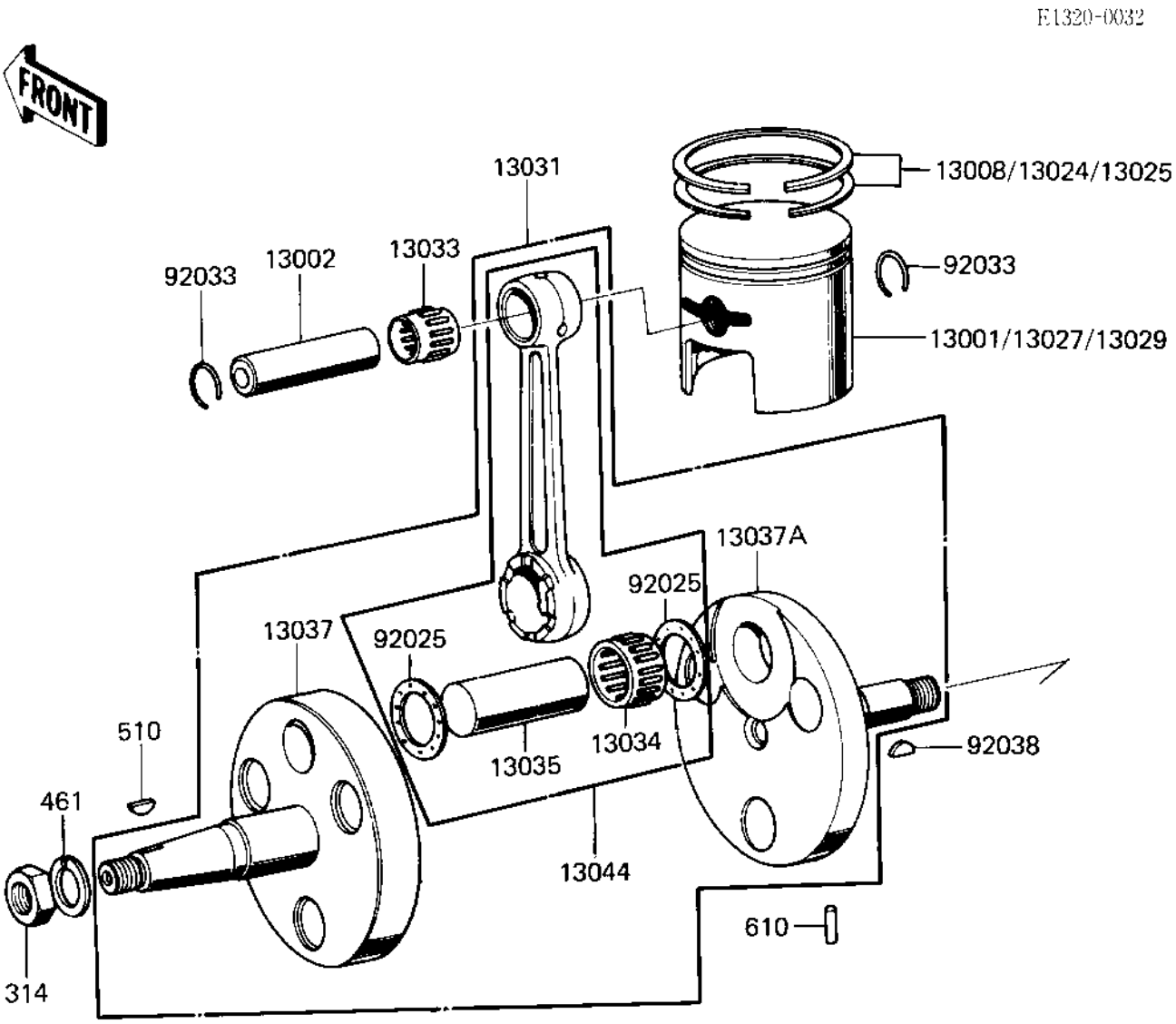

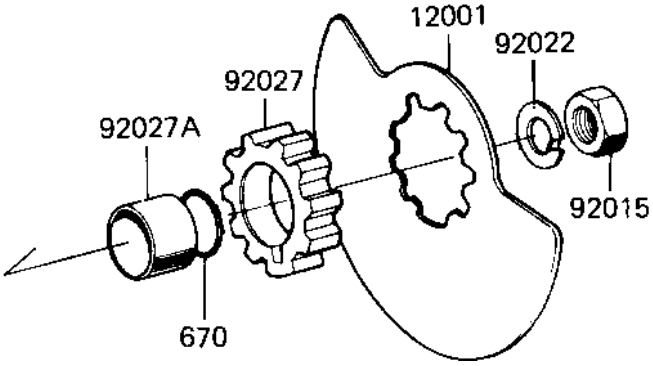

© 2026 Kawasaki Motors Corp., U.S.A.

1984 KD80

PARTS LIST

CRANKSHAFT/PISTON/ROTARY VALVE

Kawasaki
Let the Good Times Roll®

ITEM NAME	PART NUMBER	QUANTITY
VALVE,ROTARY DISC (Ref # 12001)	12002-030	1
PISTON,STD (Ref # 13001)	13001-061	1
PIN-PISTON (Ref # 13002)	13002-003	1
RING SET,STD (Ref # 13008)	13008-047	1
RING SET,0.040 O/S (Ref # 13024)	13024-052	1
RING SET,0.020 O/S (Ref # 13025)	13025-051	1
PISTON,0.040 O/S (Ref # 13027)	13027-059	1
PISTON,0.020 O/S (Ref # 13029)	13029-061	1
CRANK&CONROD ASSY (Ref # 13031)	13036-050	1
BEARING,SMALL END (Ref # 13033)	13033-030	1
BEARING,BIG END (Ref # 13034)	13034-034	1
CRANK PIN (Ref # 13035)	13035-025	1
CRANKSHAFT,L.H (Ref # 13037)	13037-068	1
CRANKSHAFT,R.H (Ref # 13037A)	13038-057	1
CONNECTING ROD SET (Ref # 13044)	13044-5015	1
NUT 12MM (Ref # 92015)	92015-006	1
WASHER LOCK 12MM (Ref # 92022)	92024-003	1
WASHER-SIDE (Ref # 92025)	92025-047	2
COLLAR,ROTARY VALVE (Ref # 92027)	92027-1245	1
COLLAR,CRANKSHAFT (Ref # 92027A)	92027-285	1
CIRCLIP PISTON PIN (Ref # 92033)	92036-003	2
WOODRUFF KEY PRY PINI (Ref # 92038)	92038-003	1
NUT,10MM (Ref # 314)	314B1000	1
WASHER SPRING 10MM (Ref # 461)	461F1000	1
WOODRUFF KEY (Ref # 510)	510A3200	1
PIN DOWEL 4X10 (Ref # 610)	610A0410	1
"0" RING,16MM (Ref # 670)	670B2016	1

© 2026 Kawasaki Motors Corp., U.S.A.