1984 KD80

PARTS DIAGRAM

CYLINDER HEAD/CYLINDER

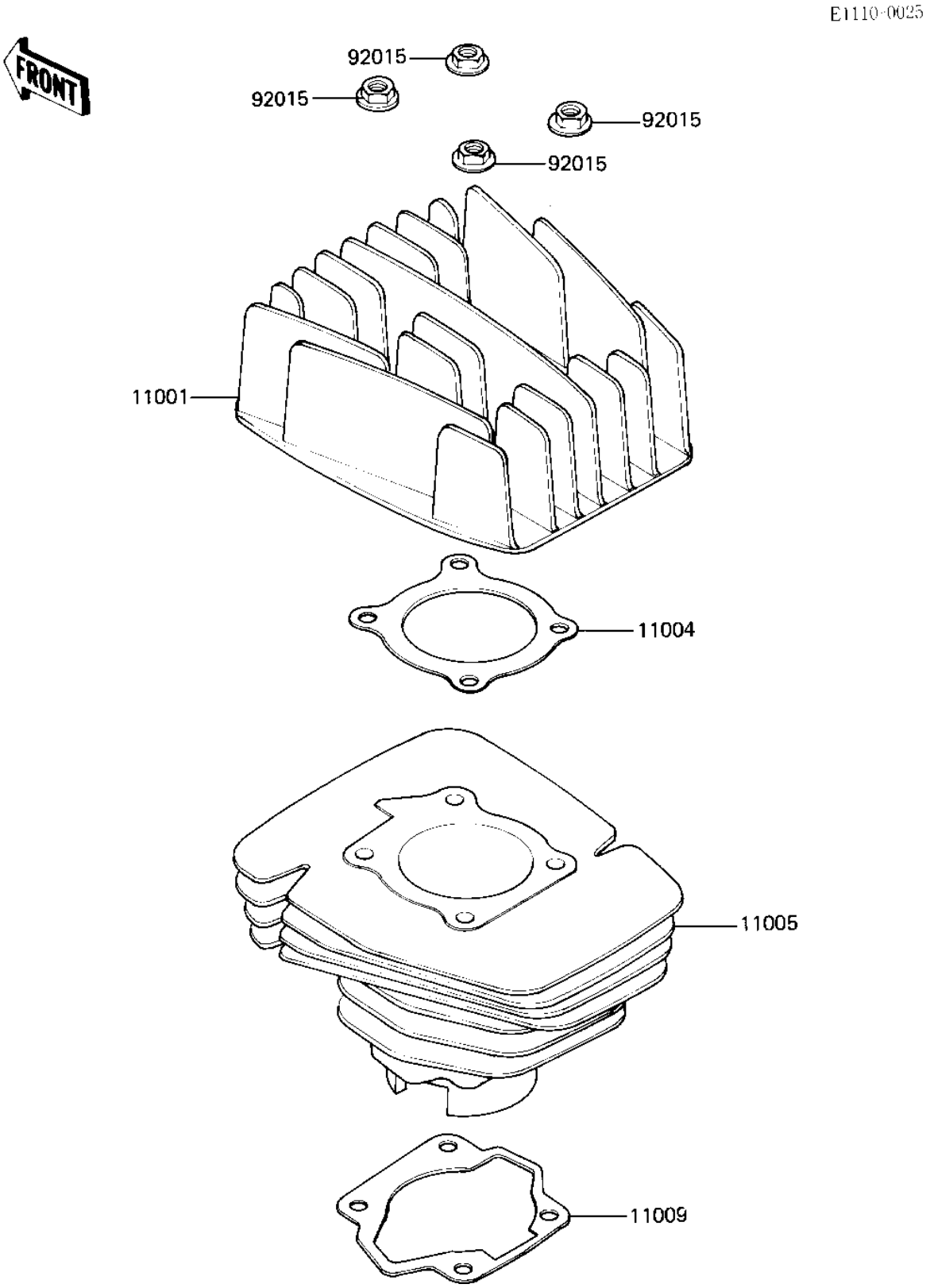

© 2026 Kawasaki Motors Corp., U.S.A.

1984 KD80

PARTS LIST

CYLINDER HEAD/CYLINDER

ITEM NAME	PART NUMBER	QUANTITY
CYLINDER HEAD (Ref # 11001)	11001-085	1
GASKET CYLINDER HEAD (Ref # 11004)	11004-015	1
CYLINDER,BLACK (Ref # 11005)	11005-152-10	1
GASKET,CYLINDER BASE (Ref # 11009)	11060-1200	1
NUT-8MM (Ref # 92015)	92015-1022	4

© 2026 Kawasaki Motors Corp., U.S.A.