1999 Xi Sport

PARTS DIAGRAM

Decals(JH750-G2)

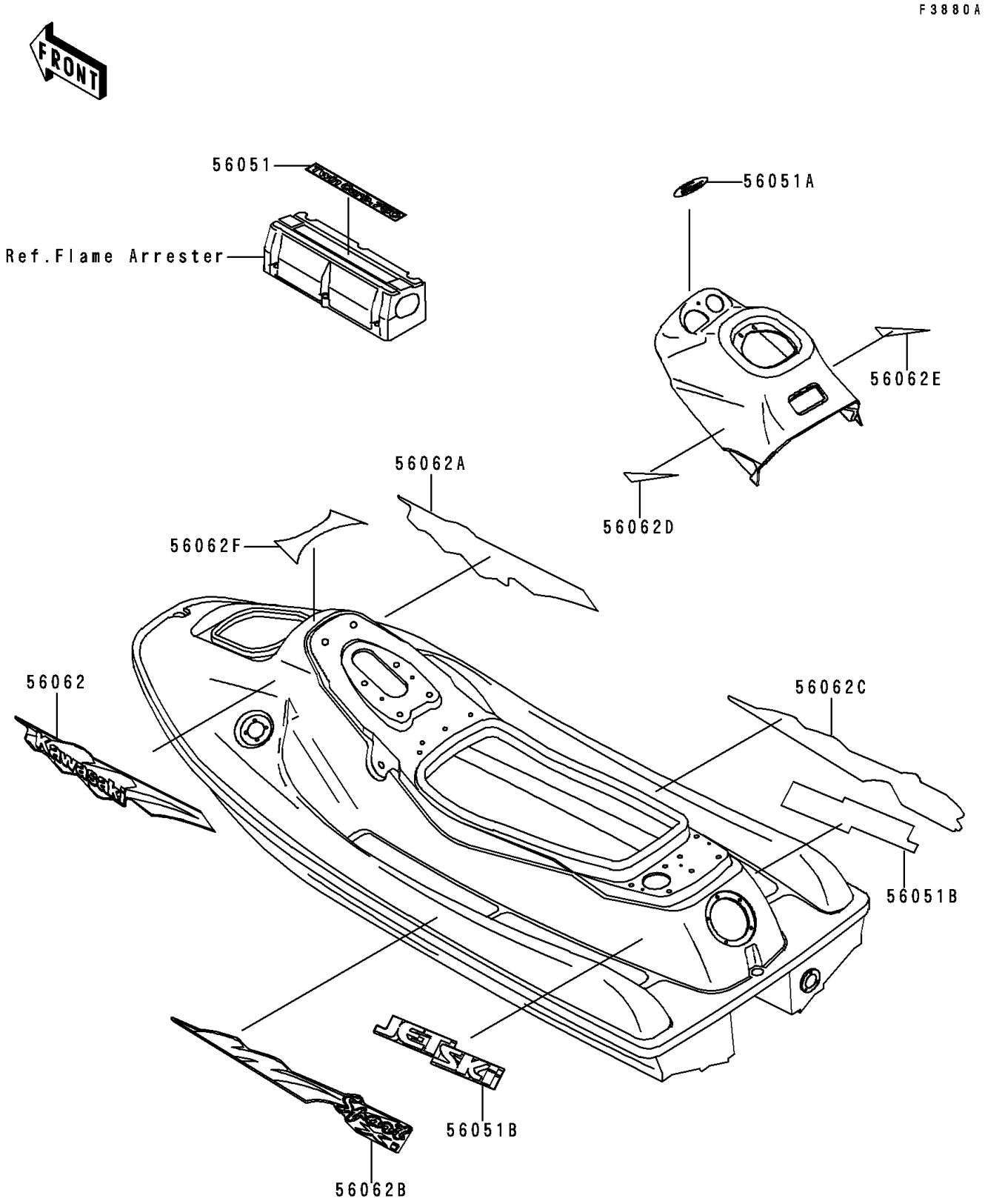

© 2026 Kawasaki Motors Corp., U.S.A.

1999 Xi Sport

PARTS LIST

Decals(JH750-G2)

ITEM NAME	PART NUMBER	QUANTITY
MARK,TWIN CARB.750 (Ref # 56051)	56051-3742	1
MARK,HANDLE COVER,JET SKI (Ref # 56051A)	56051-3751	1
MARK,DECK,JET SKI (Ref # 56051B)	56051-3817	2
PATTERN,DECK,FR,LH (Ref # 56062)	56062-3744	1
PATTERN,DECK,FR,RH (Ref # 56062A)	56062-3745	1
PATTERN,DECK,RR,LH (Ref # 56062B)	56062-3746	1
PATTERN,DECK,RR,RH (Ref # 56062C)	56062-3747	1
PATTERN,HANDLE COVER,LH (Ref # 56062D)	56062-3748	1
PATTERN,HANDLE COVER,RH (Ref # 56062E)	56062-3749	1
PATTERN,DECK,FR,UPP (Ref # 56062F)	56062-3750	1

© 2026 Kawasaki Motors Corp., U.S.A.