1984 KLT110

PARTS DIAGRAM

OWNER TOOLS

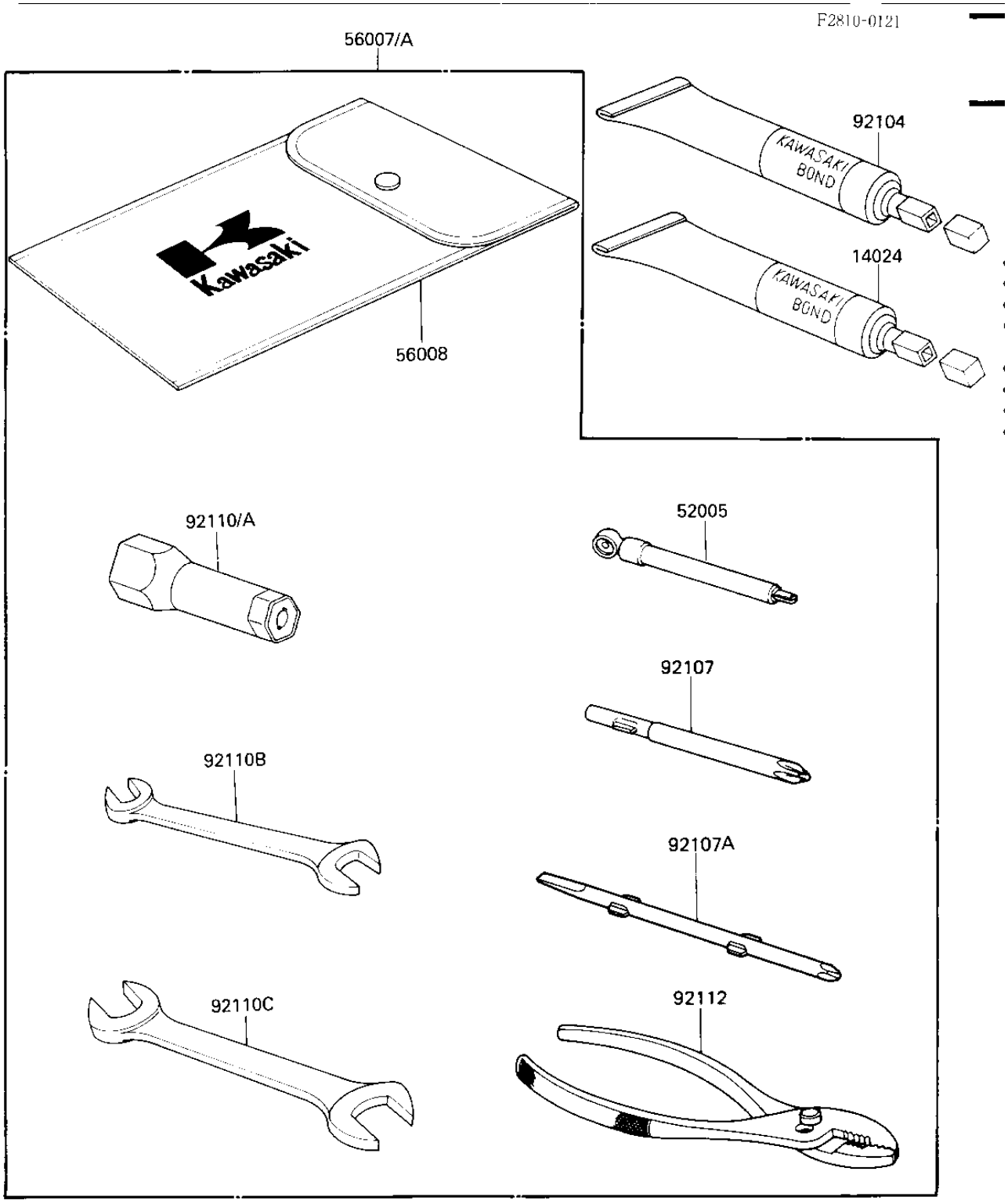

© 2026 Kawasaki Motors Corp., U.S.A.

1984 KLT110

PARTS LIST

OWNER TOOLS

ITEM NAME	PART NUMBER	QUANTITY
BOND,#10 (Ref # 14024)	56019-120	1
TOOLKIT (Ref # 56007)	56007-1293	1
BAG,TOOL (Ref # 56008)	56008-1007	1
LIQUID GASKET (Ref # 92104)	92104-002	1
SCREW DRIVER #3 PHLIP (Ref # 92107)	92107-005	1
92107-1052 (Canada) (Ref # 92107A)	92107-1051	1
TOOL-WRENCH (Ref # 92110)	92110-1111	1
TOOL-WRENCH,OPEN END, (Ref # 92110B)	92110-1152	1
TOOL-WRENCH,OPEN END, (Ref # 92110C)	92110-1153	1
PLIERS,160MM (Ref # 92112)	92112-003	1

© 2026 Kawasaki Motors Corp., U.S.A.