1999 Xi Sport

PARTS DIAGRAM

Drive Shaft

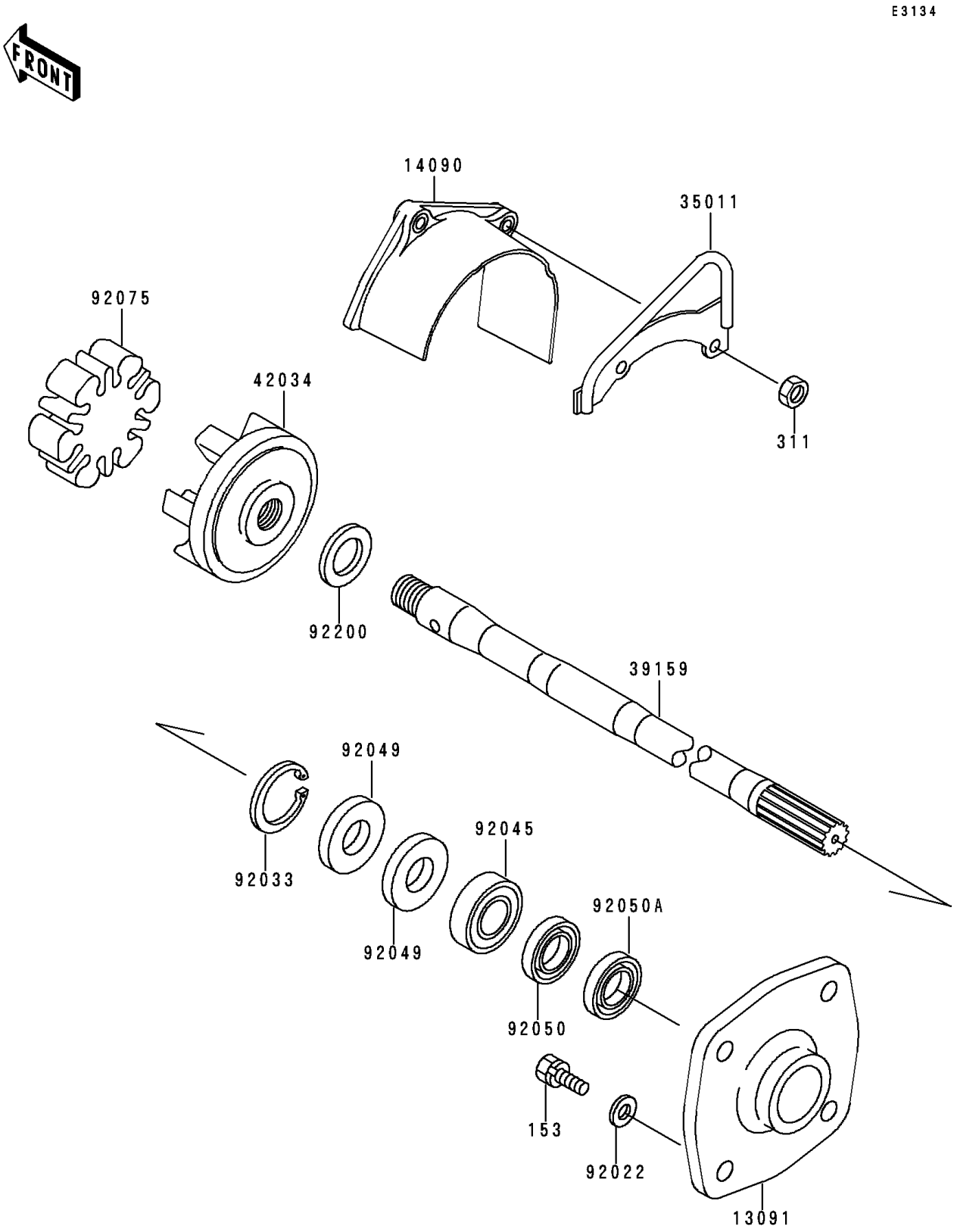

© 2026 Kawasaki Motors Corp., U.S.A.

1999 Xi Sport

PARTS LIST

Drive Shaft

ITEM NAME	PART NUMBER	QUANTITY

© 2026 Kawasaki Motors Corp., U.S.A.