1996 Super Sport XI

PARTS DIAGRAM

Owner's Tools

F3182

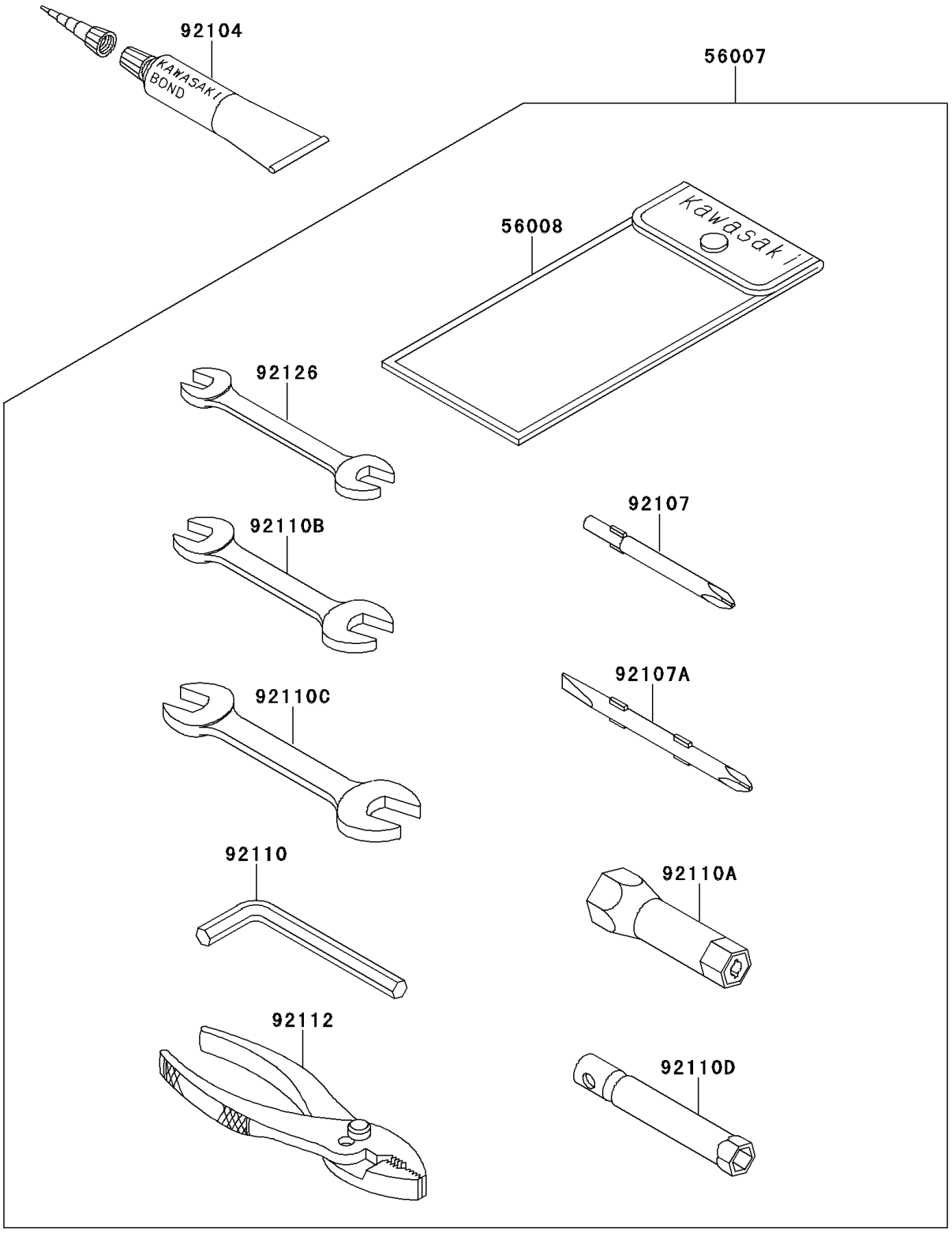

© 2026 Kawasaki Motors Corp., U.S.A.

1996 Super Sport XI

PARTS LIST

Owner's Tools

ITEM NAME	PART NUMBER	QUANTITY
TOOL-KIT (Ref # 56007)	56007-3710	1
BAG,TOOL (Ref # 56008)	56008-1007	1
GASKET-LIQUID,TUBE,100G,SILVER (Ref # 92104)	92104-002	AR
TOOL-DRIVER,#3PHILLIPS (Ref # 92107)	92107-005	1
TOOL-DRIVER,#2PHILLIPS&SLOT (Ref # 92107A)	92107-1051	1
TOOL-WRENCH,ALLEN,5MM (Ref # 92110)	92110-1015	1
TOOL-WRENCH,BOX,21MM (Ref # 92110A)	92110-1113	1
TOOL-WRENCH,OPEN END,10X12 (Ref # 92110B)	92110-1152	1
TOOL-WRENCH,OPEN END,14X17 (Ref # 92110C)	92110-1153	1
TOOL-WRENCH,BOX,10MM (Ref # 92110D)	92110-1156	1
TOOL-PLIERS (Ref # 92112)	92112-003	1
TOOL-WRENCH,OPEN END,8X10 (Ref # 92126)	92126-001	1

© 2026 Kawasaki Motors Corp., U.S.A.