1986 GPz

PARTS DIAGRAM

FUEL TANK (ZX550-A3, CANADA)

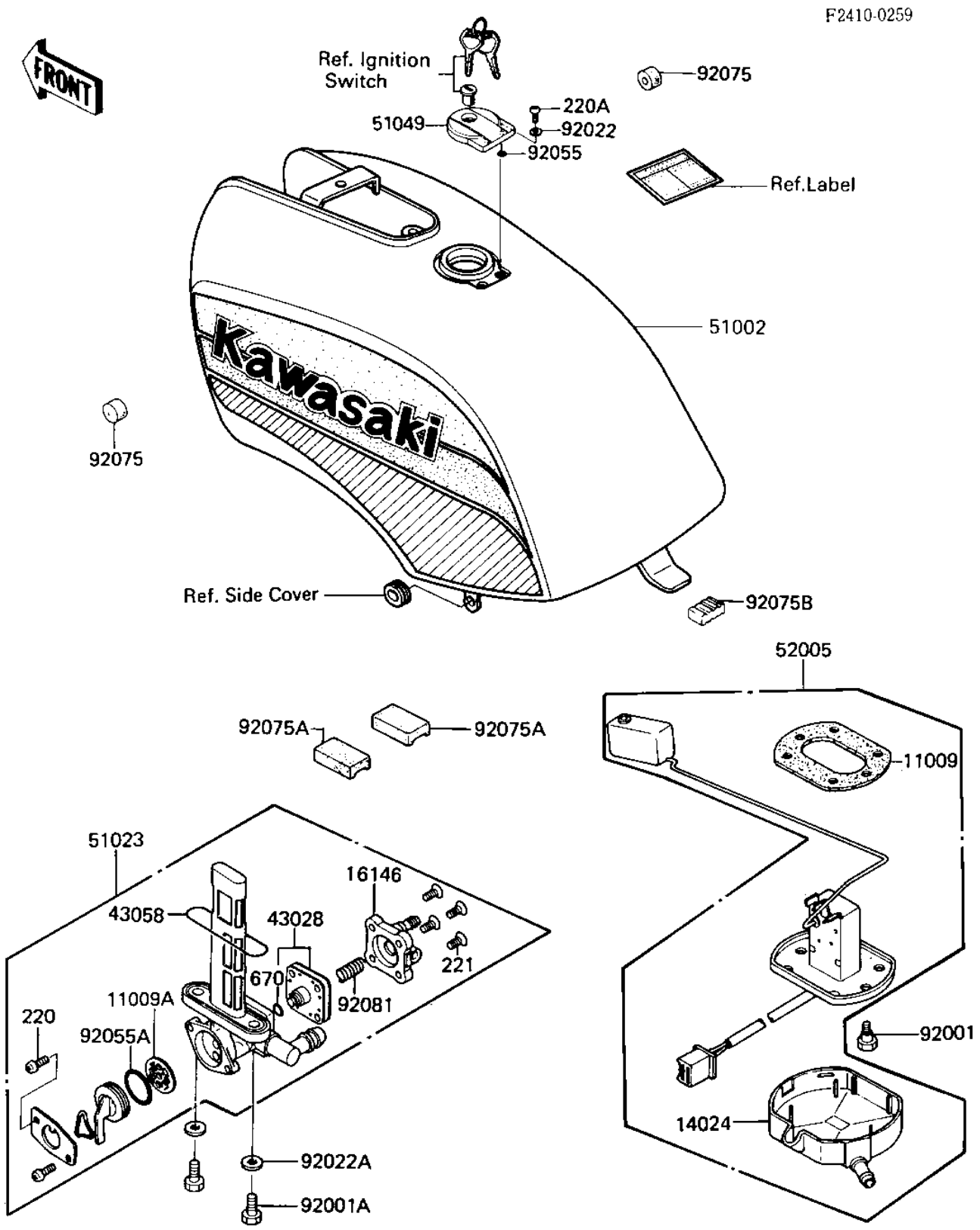

© 2026 Kawasaki Motors Corp., U.S.A.

1986 GPz

PARTS LIST

FUEL TANK (ZX550-A3, CANADA)

Kawasaki
Let the Good Times Roll®

ITEM NAME	PART NUMBER	QUANTITY
GASKET (Ref # 11009)	11009-1037	1
GASKET,FUEL TAP (Ref # 11009A)	11009-1188	1
COVER,FUEL GAUGE (Ref # 14024)	14024-1434	1
COVER ASSY,FUEL TAP (Ref # 16146)	16146-1009	1
DIAPHRAGM (Ref # 43028)	43028-1033	1
"O" RING (Ref # 43058)	51039-003	1
TANK-COMP-FUEL,EBONY (Canada) (Ref # 51002)	51002-5193-H8	1
TAP-ASSY,FUEL (Ref # 51023)	51023-1186	1
CAP-TANK,FUEL (Ref # 51049)	51049-1097	1
GAUGE,FUEL (Ref # 52005)	52005-1034	1
BOLT,FUEL GAUGE FIT (Ref # 92001)	92001-1069	6
BOLT,6X20,FUEL TAP (Ref # 92001A)	92001-1091	2
WASHER,PLAIN (Ref # 92022)	92022-1038	2
WASHER-PLAIN (Ref # 92022A)	92022-183	2
"0" RING (Ref # 92055)	92055-1023	2
"0" RING,FUEL TAP LEV (Ref # 92055A)	92055-1085	1
DAMPER RUBBER-FL TANK (Ref # 92075)	92075-101	2
DAMPER,FUEL TANK (Ref # 92075A)	92075-1463	2
DAMPER,FUEL,TANK (Ref # 92075B)	92075-1553	1
SPRING,DIAPHRAGM VALV (Ref # 92081)	92081-1240	1
SCREW PAN HEAD 3X8 (Ref # 220)	220B0308	2
SCREW PAN HEAD 5X10 (Ref # 220A)	220B0510	2
SCREW-CSK-CROS,4X14 (Ref # 221)	221B0414	4
"O" RING,4MM (Ref # 670)	670B1504	1

© 2026 Kawasaki Motors Corp., U.S.A.