1996 Super Sport XI

PARTS DIAGRAM

Flame Arrester

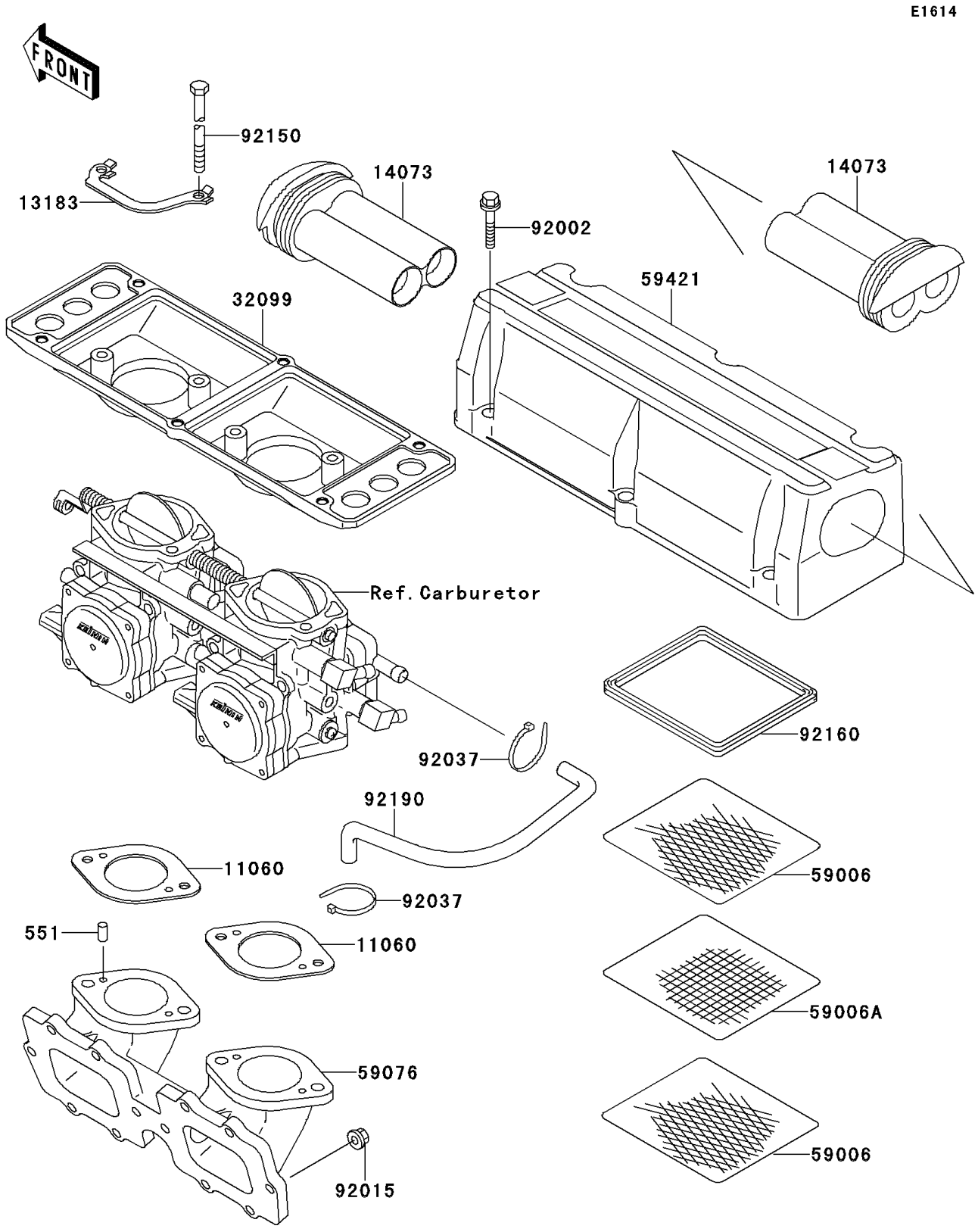

© 2026 Kawasaki Motors Corp., U.S.A.

1996 Super Sport XI

PARTS LIST

Flame Arrester

ITEM NAME	PART NUMBER	QUANTITY
PIN-DOWEL (Ref # 551)	551R0408	4
GASKET (Ref # 11060)	11060-3758	2
PLATE (Ref # 13183)	13183-3726	2
DUCT (Ref # 14073)	14073-3745	2
CASE (Ref # 32099)	32099-3770	1
ARRESTER-FLAME (Ref # 59006)	59006-3707	4
ARRESTER-FLAME (Ref # 59006A)	59006-3708	2
MANIFOLD-INTAKE (Ref # 59076)	59076-3721	1
COVER-INTAKE (Ref # 59421)	59421-3719	1
BOLT,6X30 (Ref # 92002)	92002-3726	6
NUT,6MM (Ref # 92015)	92015-3767	12
CLAMP (Ref # 92037)	92037-1173	2
BOLT,6X125 (Ref # 92150)	92150-3784	4
DAMPER (Ref # 92160)	92160-3704	2
TUBE (Ref # 92190)	92190-3965	1

© 2026 Kawasaki Motors Corp., U.S.A.