1996 Super Sport XI

PARTS DIAGRAM

Carburetor

Kawasaki
Let the Good Times Roll®

E1611

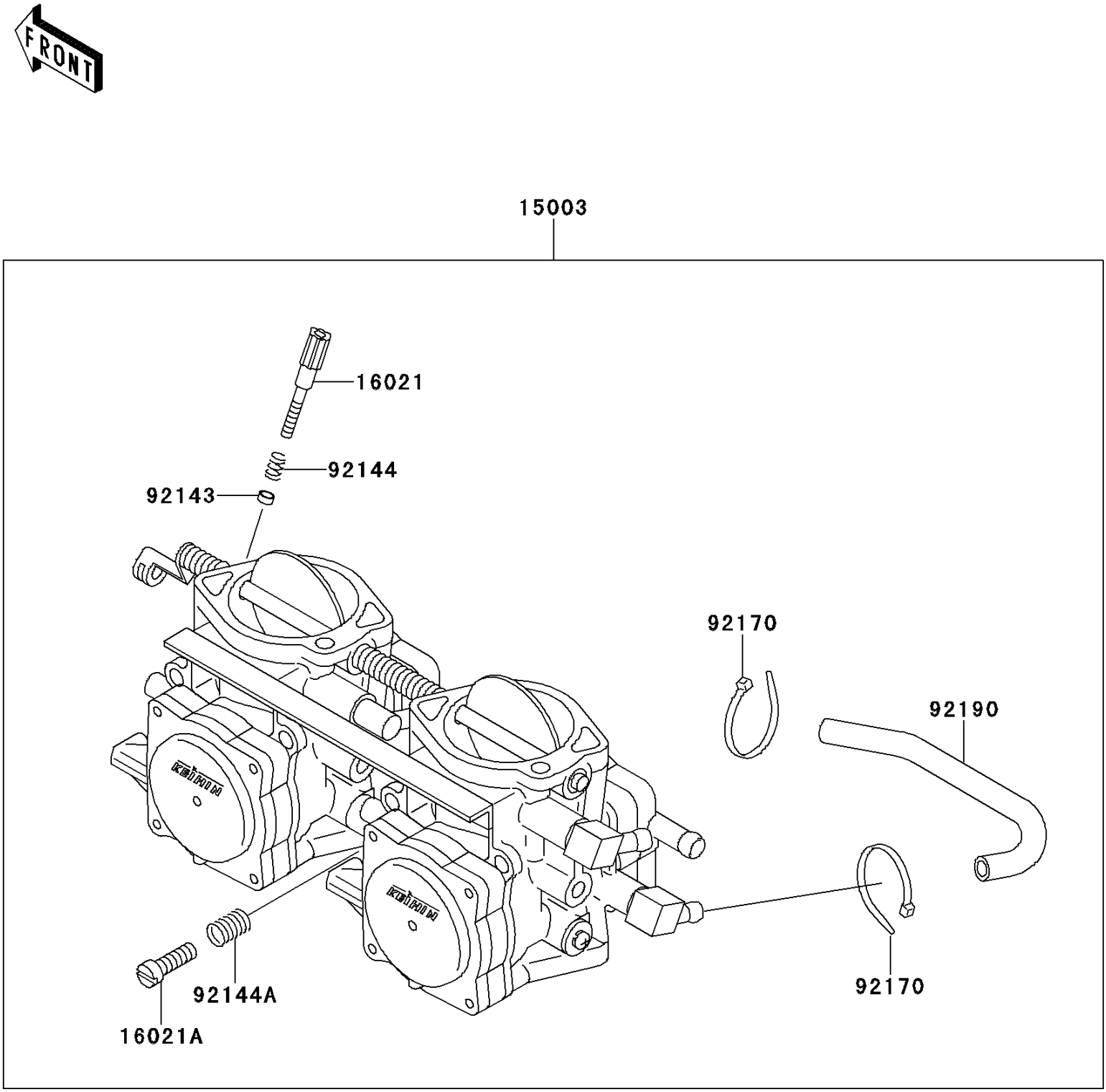

© 2026 Kawasaki Motors Corp., U.S.A.

1996 Super Sport XI

PARTS LIST

Carburetor

ITEM NAME	PART NUMBER	QUANTITY
CARBURETOR-ASSY (Ref # 15003)	15003-3708	1
SCREW-THROTTLE STOP (Ref # 16021)	16021-3702	1
SCREW-THROTTLE STOP (Ref # 16021A)	16021-3704	1
COLLAR,THROTTLE STOP SCREW (Ref # 92143)	92143-3709	1
SPRING,THROTTLE STOP SCREW (Ref # 92144)	92144-3706	1
SPRING,THROTTLE STOP SCREW (Ref # 92144A)	92144-3745	1
CLAMP,TUBE (Ref # 92170)	92170-3740	2
TUBE,5.3X10.5X180 (Ref # 92190)	92190-3910	1

© 2026 Kawasaki Motors Corp., U.S.A.