1996 Super Sport XI

PARTS DIAGRAM

Crankshaft/Piston(s)

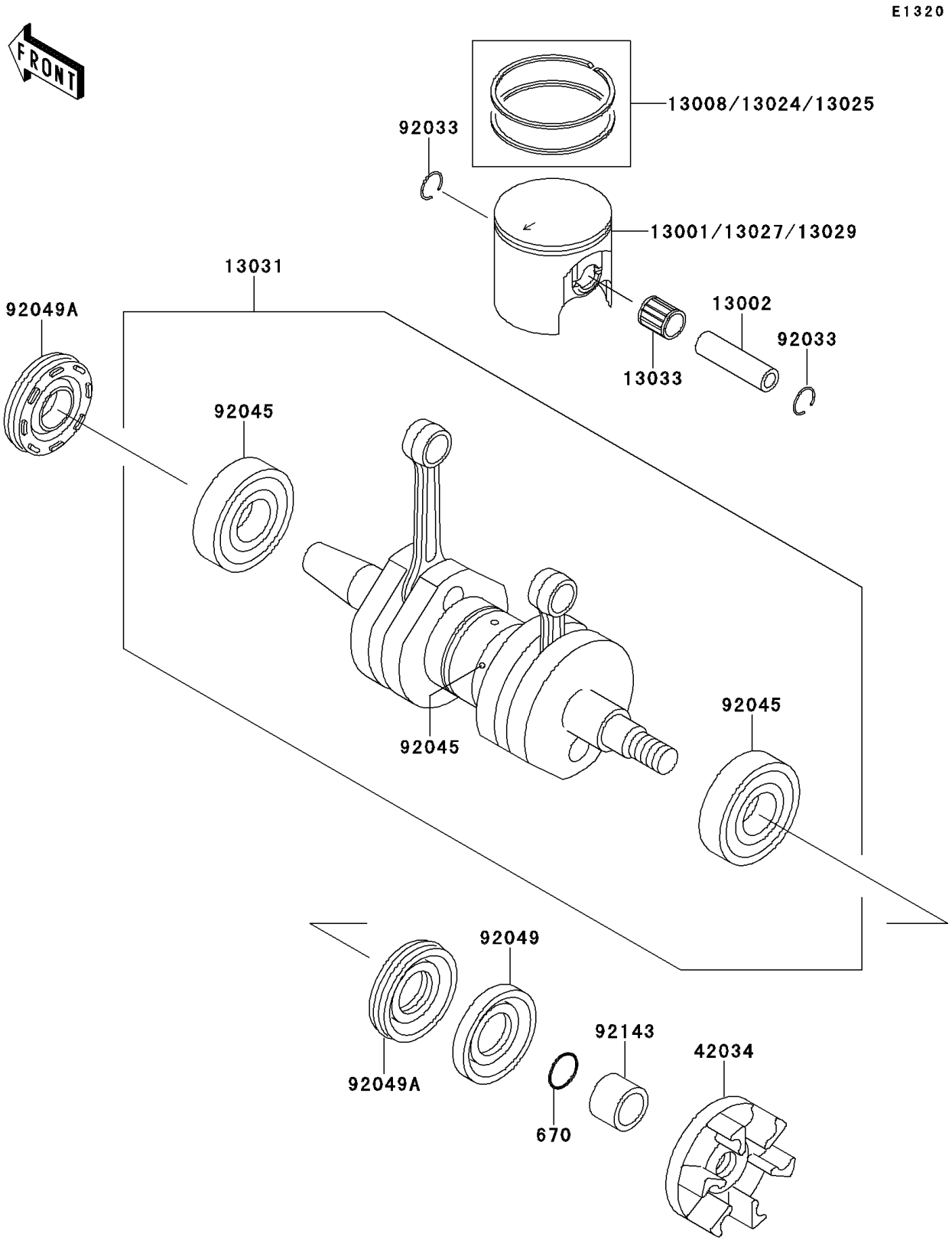

© 2026 Kawasaki Motors Corp., U.S.A.

1996 Super Sport XI

PARTS LIST

Crankshaft/Piston(s)

ITEM NAME	PART NUMBER	QUANTITY
O RING,16MM (Ref # 670)	670B2016	1
PISTON-ENGINE,STD (Ref # 13001)	13001-3719	2
PIN-PISTON (Ref # 13002)	13002-3706	2
RING-SET-PISTON,STD (Ref # 13008)	13008-3708	2
RING-SET-PISTON LL,O/S 1.00 (Ref # 13024)	13024-3706	AR
RING-SET-PISTON L,O/S 0.50 (Ref # 13025)	13025-3706	AR
PISTON-ENGINE LL,O/S 1.00 (Ref # 13027)	13027-3711	AR
PISTON-ENGINE L,O/S 0.50 (Ref # 13029)	13029-3711	AR
CRANKSHAFT-COMP (Ref # 13031)	13031-3730	1
BEARING-SMALL END (Ref # 13033)	13033-3703	2
COUPLING (Ref # 42034)	42034-3707	1
RING-SNAP (Ref # 92033)	92033-3721	4
BEARING-BALL (Ref # 92045)	92045-3714	3
SEAL-OIL,S30726 (Ref # 92049)	92049-3706	1
SEAL-OIL,FWJ7307210ZS (Ref # 92049A)	92049-3713	2
COLLAR (Ref # 92143)	92143-3758	1

© 2026 Kawasaki Motors Corp., U.S.A.