1996 Super Sport XI

PARTS DIAGRAM

Cylinder Head/Cylinder

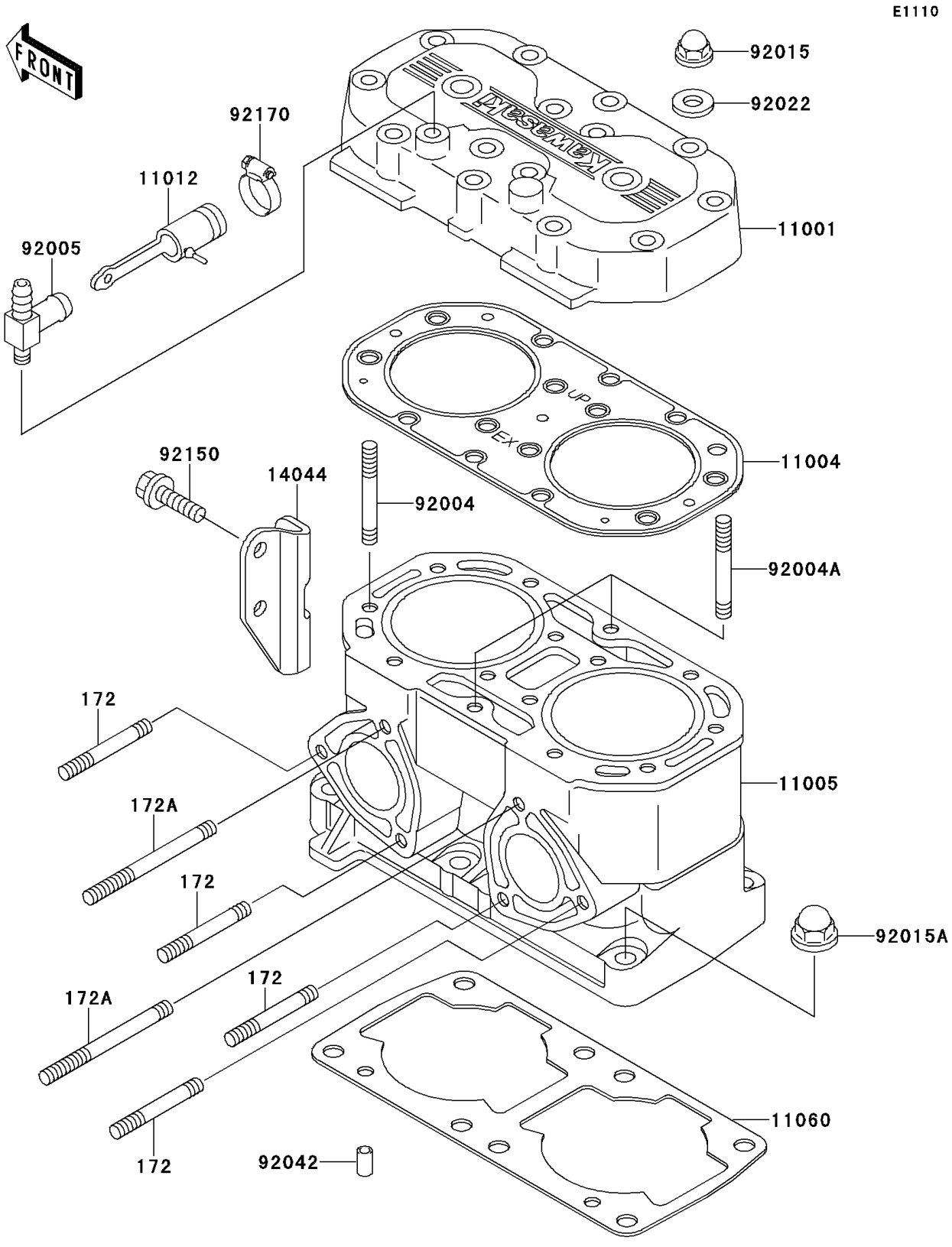

© 2026 Kawasaki Motors Corp., U.S.A.

1996 Super Sport XI

PARTS LIST

Cylinder Head/Cylinder

ITEM NAME	PART NUMBER	QUANTITY
BOLT-STUD (Ref # 172)	172R0830	4
BOLT-STUD,8X75 (Ref # 172A)	172R0875	2
HEAD-CYLINDER (Ref # 11001)	11001-3724	1
GASKET-HEAD (Ref # 11004)	11004-3714	1
CYLINDER-ENGINE (Ref # 11005)	11005-3729	1
CAP (Ref # 11012)	11012-3757	1
GASKET,CYLINDER BASE (Ref # 11060)	11060-3711	1
HOLDER-CABLE (Ref # 14044)	14044-3722	1
STUD,8X43 (Ref # 92004)	92004-3715	12
STUD,8X43 (Ref # 92004A)	92004-3719	2
FITTING (Ref # 92005)	92005-3711	1
NUT,CAP,8MM (Ref # 92015)	92015-1371	14
NUT,10MM (Ref # 92015A)	92015-1649	8
WASHER,8.2X18X1.5 (Ref # 92022)	92022-1964	14
PIN,DOWEL,6.3X8X14 (Ref # 92042)	92042-007	2
BOLT,8X16 (Ref # 92150)	92150-3722	2
CLAMP (Ref # 92170)	92170-3729	1

© 2026 Kawasaki Motors Corp., U.S.A.