1985 KLR250

PARTS DIAGRAM

FUEL TANK

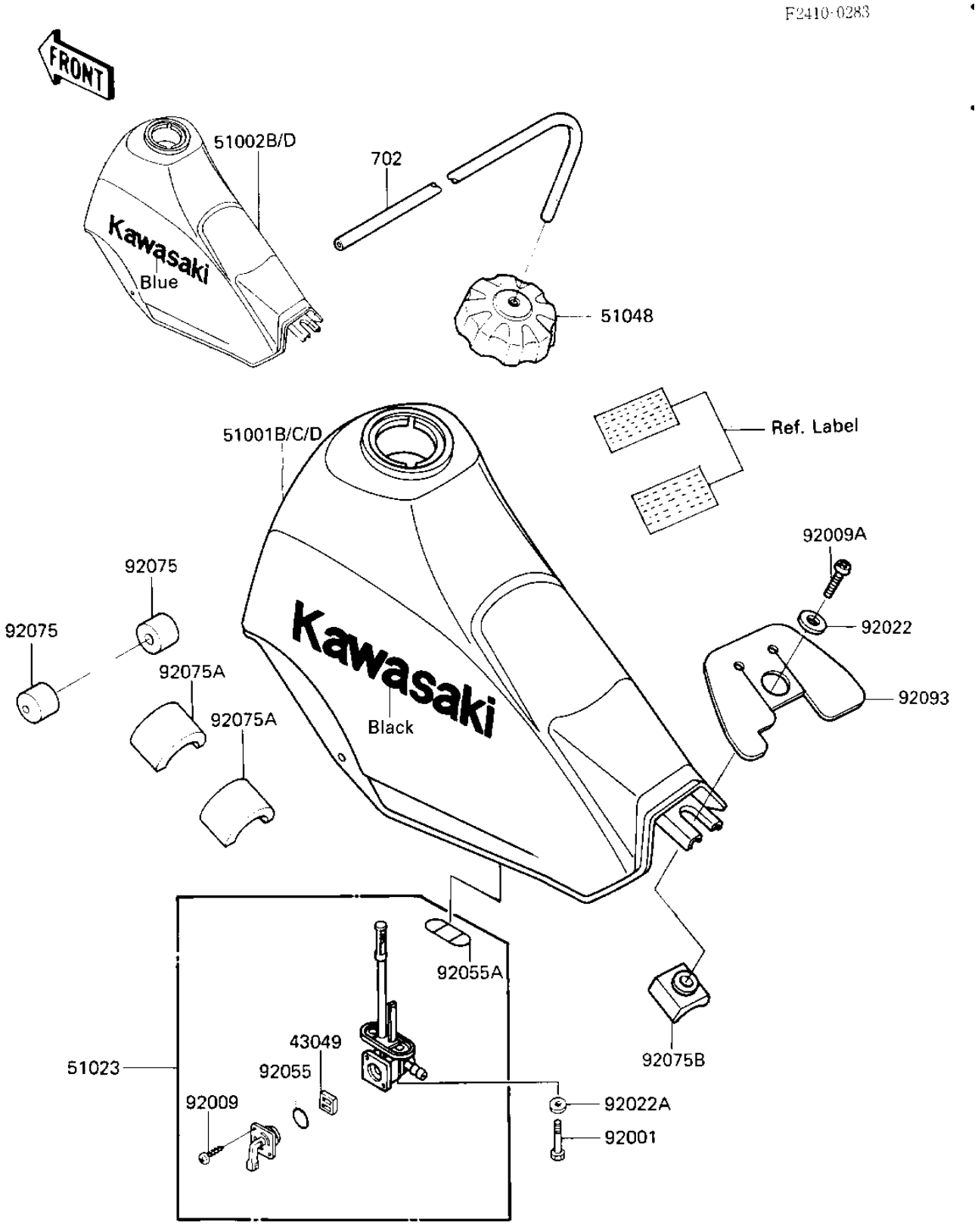

© 2026 Kawasaki Motors Corp., U.S.A.

1985 KLR250

PARTS LIST

FUEL TANK

ITEM NAME	PART NUMBER	QUANTITY
PACKING,FUEL TAP VALV (Ref # 43049)	43049-1017	1
TANK-COMP-FUEL,P.WHIT (Ref # 51001B)	51002-5079-F1	1
TANK-COMP-FUEL,P.WHIT (Ref # 51001C)	51002-5078-F1	1
51002-5078-7F (Canada) (Ref # 51001D)	51001-5490-7F	1
TANK-COMP-FUEL,P.WHIT (Ref # 51002B)	51002-5155-F1	1
TAP-ASSY,FUEL (Ref # 51023)	51023-1112	1
CAP-ASSY-TANK,FUEL (Ref # 51048)	51048-1063	1
BOLT,6X20,FUEL TAP (Ref # 92001)	92001-1091	2
SCREW PAN HEAD 3X5 (Ref # 92009)	220B0305A	2
SCREW,6X8 (Ref # 92009A)	92009-1294	1
WASHER,6.2X38X1.2 (Ref # 92002)	92022-1659	1
WASHER-PLAIN (Ref # 92022A)	92022-183	2
"0" RING,FUEL TAP LEV (Ref # 92055)	92055-1111	1
"0" RING,FUEL TANK (Ref # 92055A)	92055-1112	1
DAMPER RUBBER,FL TANK (Ref # 92075)	92075-125	2
DAMPER (Ref # 92075A)	92075-1382	2
DAMPER,FUEL TANK (Ref # 92075B)	92075-1638	1
SEAL,FUEL TANK (Ref # 92093)	92093-1182	1
TUBE-RUBBER 5X400 (Ref # 702)	702A05400	1

© 2026 Kawasaki Motors Corp., U.S.A.