1985 Eliminator

PARTS DIAGRAM

BREATHER COVER/OIL PAN

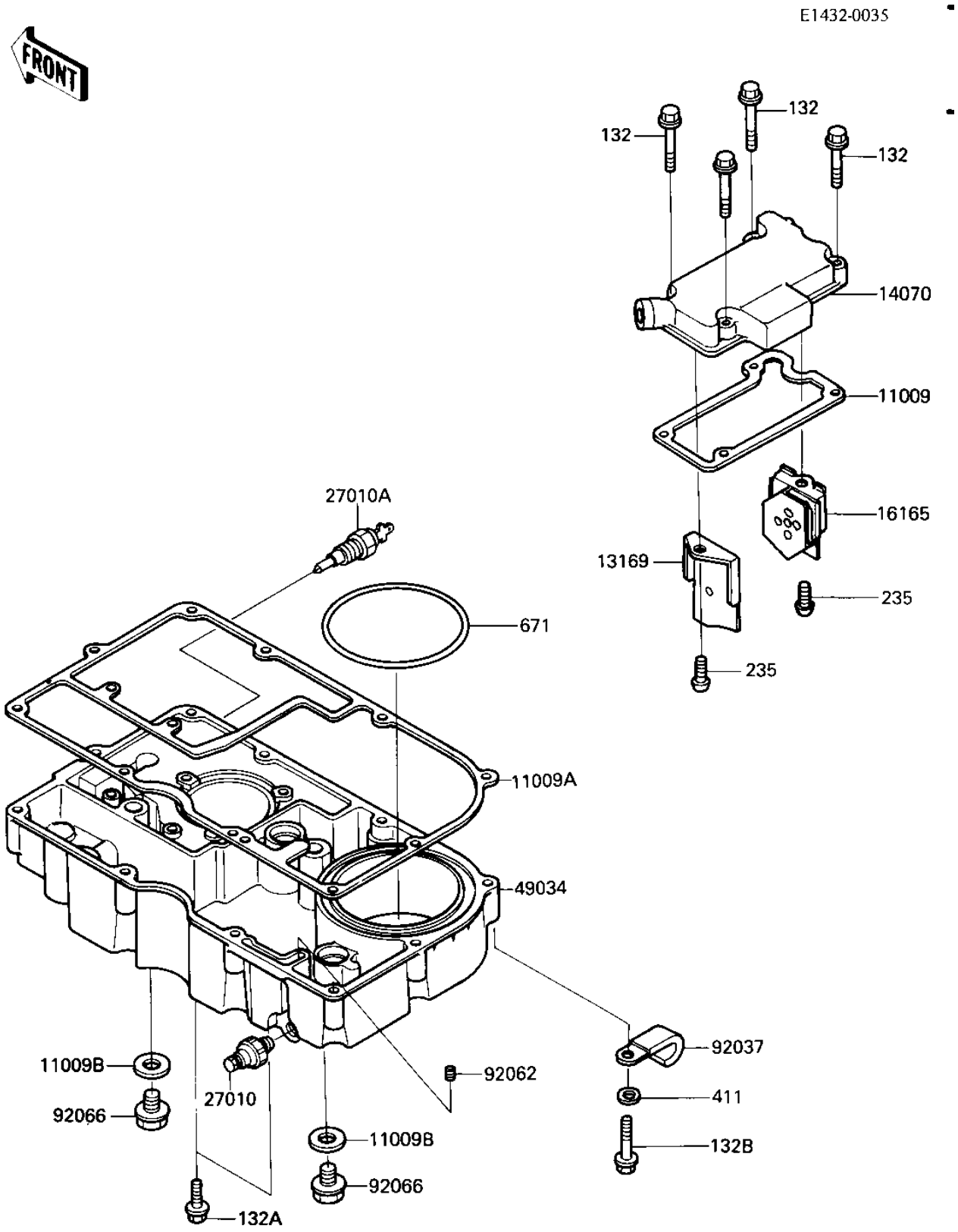

© 2026 Kawasaki Motors Corp., U.S.A.

1985 Eliminator

PARTS LIST

BREATHER COVER/OIL PAN

Kawasaki
Let the Good Times Roll®

ITEM NAME	PART NUMBER	QUANTITY
GASKET,BREATHER BODY (Ref # 11009)	11009-1861	1
GASKET (Ref # 11009A)	11009-1981	1
GASKET,DRIN PLUG (Ref # 11009B)	92065-097	2
PLATE,BREATHER (Ref # 13169)	13169-1967	1
BODY-BREATHER (Ref # 14070)	14070-1061	1
SEPARATOR,OIL (Ref # 16165)	16165-1053	1
SWITCH,OIL PRESSURE (Ref # 27010)	27010-1155	1
SWITCH (Ref # 27010A)	27010-1173	1
PAN-OIL (Ref # 49034)	49034-1069	1
CLAMP,WIRING HARNESS (Ref # 92037)	92037-1539	3
NOZZLE,YELLOW (Ref # 92062)	92062-1057	1
PLUG,OIL DRAIN,12X15 (Ref # 92066)	92066-1174	2
BOLT-FLANGED-SMALL (Ref # 132)	132E0625	4
BOLT-FLANGED-SMALL (Ref # 132A)	132J0625	6
BOLT-FLANGED-SMALL (Ref # 132B)	132J0640	10
SCREW-PAN-WP-CROS (Ref # 235)	235B0610	2
WASHER PLAIN (Ref # 411)	411F0600	3
"0" RING,90MM (Ref # 671)	671B2590	1

© 2026 Kawasaki Motors Corp., U.S.A.