1985 Ninja® 600

PARTS DIAGRAM

FRONT WHEEL/HUB

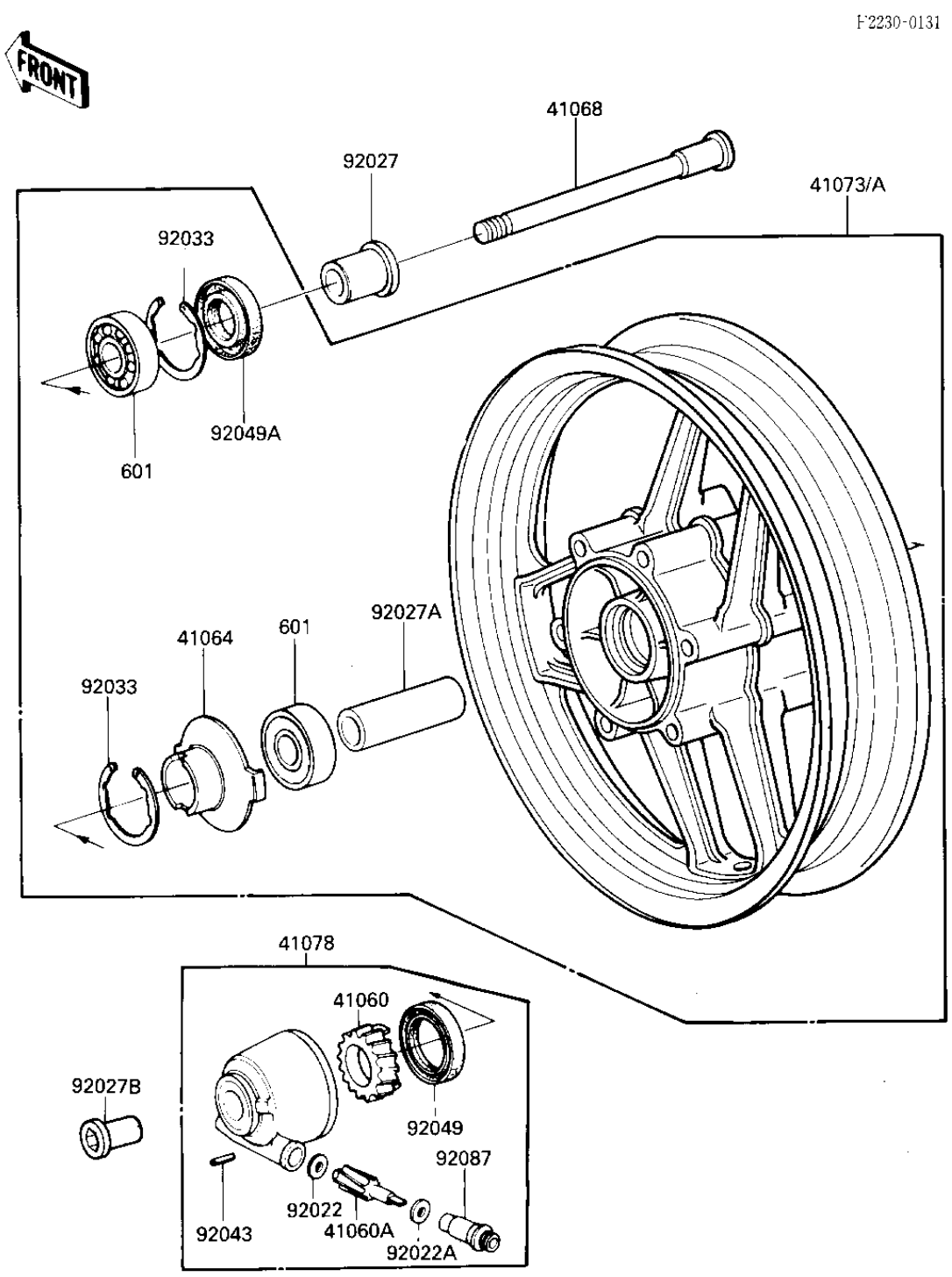

Ref No.
4
4
4
4
4
4
4
9
9
9
9
9
9
9
9
9

© 2026 Kawasaki Motors Corp., U.S.A.

1985 Ninja® 600

PARTS LIST

FRONT WHEEL/HUB

ITEM NAME	PART NUMBER	QUANTITY

© 2026 Kawasaki Motors Corp., U.S.A.