# 1985 Ninja® 600

## PARTS DIAGRAM

## STANDS

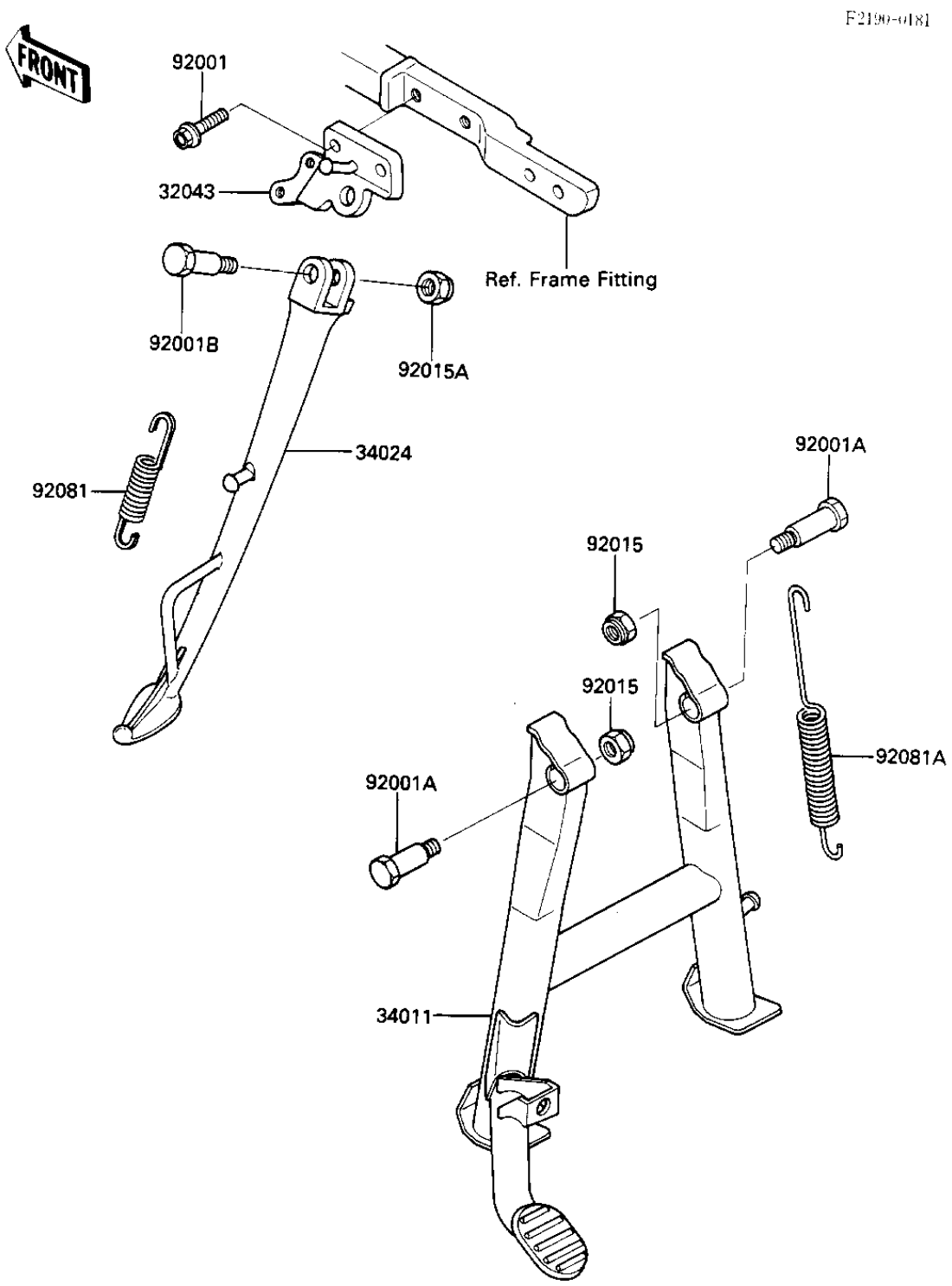


© 2026 Kawasaki Motors Corp., U.S.A.

# 1985 Ninja® 600

## PARTS LIST

## STANDS

| ITEM NAME | PART NUMBER | QUANTITY |
|---|---|---|

© 2026 Kawasaki Motors Corp., U.S.A.