1985 Prairie

PARTS DIAGRAM

OIL PUMP/OIL FILTER ('84-'85 C2/C3)

E1710-0046

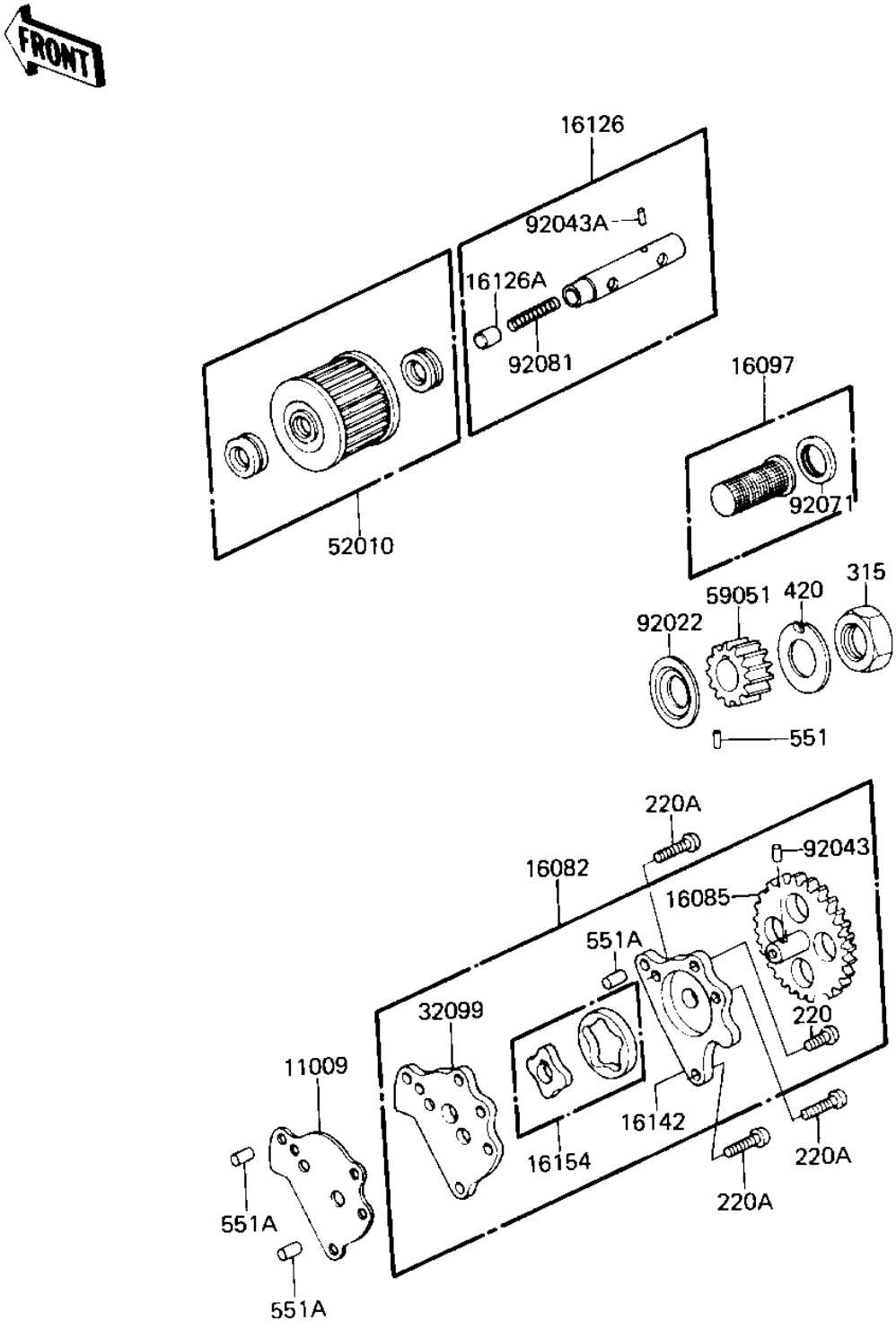

© 2026 Kawasaki Motors Corp., U.S.A.

1985 Prairie

PARTS LIST

OIL PUMP/OIL FILTER ('84-'85 C2/C3)

ITEM NAME	PART NUMBER	QUANTITY
GASKET,OIL PUMP (Ref # 11009)	11060-1115	1
PUMP ASSY OIL (Ref # 16082)	16082-1015	1
GEAR,OIL PUMP (Ref # 16085)	16085-026	1
STRAINER ASSY,OIL (Ref # 16097)	16097-1001	1
BOLT ASSY,OIL FILTER (Ref # 16126)	16156-002	1
PISTON (Ref # 16126A)	92136-002	1
COVER OIL PUMP (Ref # 16142)	16142-1006	1
ROTOR OIL PUMP (Ref # 16154)	16154-1008	1
BODY,OIL PUMP (Ref # 32099)	16141-006	1
FILTER,OIL (Ref # 52010)	16099-004	1
GEAR,OIL PUMP (Ref # 59051)	16084-018	1
WASHER,16X29X1 (Ref # 92022)	92022-1377	1
PIN,DOWEL (Ref # 92043)	92042-041	1
SPRING PIN (Ref # 92043A)	92043-123	1
GROMMET,OIL STRAINER (Ref # 92071)	92071-100	1
SPRING,PISTON (Ref # 92081)	92081-043	1
SCREW PAN HEAD 6X16 (Ref # 220)	220B0616	1
SCREW PAN HEAD 6X25 (Ref # 220A)	220B0625	3
NUT 16MM (Ref # 315)	315B1600	1
WASHER,LOCK,16M/M (Ref # 420)	420B1611	1
PIN DOWEL 3X12 (Ref # 551)	551A0312	1
PIN,DOWEL,6X8 (Ref # 551A)	551A0608	3

© 2026 Kawasaki Motors Corp., U.S.A.