1985 Prairie

PARTS DIAGRAM

MUFFLER ('84-'85 C2/C3)

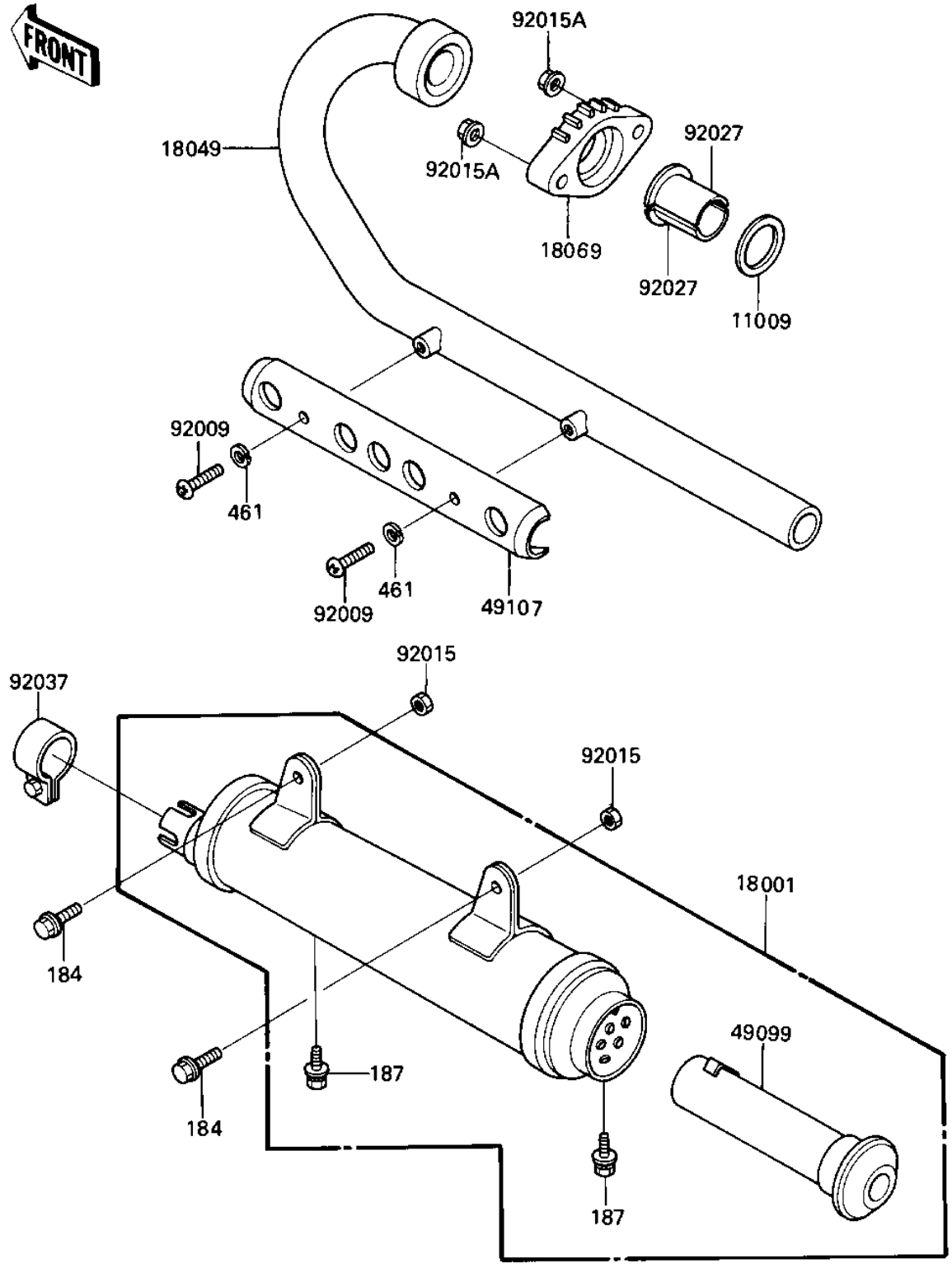

© 2026 Kawasaki Motors Corp., U.S.A.

1985 Prairie

PARTS LIST

MUFFLER ('84-'85 C2/C3)

ITEM NAME	PART NUMBER	QUANTITY
GASKET,EXHAUST PIPE H (Ref # 11009)	11009-1866	1
MUFFLER (Ref # 18001)	18001-1452	1
PIPE-EXHAUST (Ref # 18049)	18049-1153	1
HOLDER EXHAUST PIPE (Ref # 18069)	18069-1014	1
BAFFLE-PIPE MUFFLER (Ref # 49099)	49099-1223	1
COVER-EXHAUST PIPE,BL (Ref # 49107)	49107-1004	1
SCREW,6X6.7,BLACK (Ref # 92009)	92009-1285	2
NUT,U,8MM,BLACK (Ref # 92015)	92015-1205	2
NUT,8MM (Ref # 92015A)	92015-1398	2
COLLAR,EXHAUST PIPE (Ref # 92027)	92027-264	2
CLAMP,MUFFLER CONNECT (Ref # 92037)	92037-1115	1
BOLT-UPSET-WP-SMALL (Ref # 184)	184J0820	2
BOLT 6X12 (Ref # 187)	187B0612	2
WASHER-SPRING,6MM,BLA (Ref # 461)	461K0600	2

© 2026 Kawasaki Motors Corp., U.S.A.